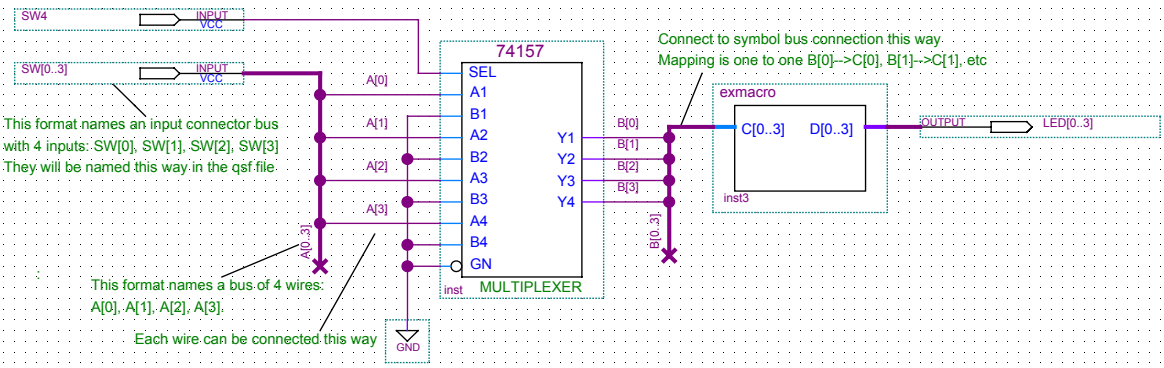
SW4
INPUT
VCC
SW[0..3]
INPUT
VCC
This format names an input connector bus
with 4 inputs: SW[0], SW[1], SW[2], SW[3]
They will be named this way in the qsf file
A[0]
A[1]
A[2]
A[3]
A[0..3]
This format names a bus of 4 wires:
A[0], A[1], A[2], A[3].
Each wire can be connected this way
GND
74157
SEL
A1
B1
A2
B2
A3
B3
A4
B4
GN
Y1
Y2
Y3
Y4
inst
MULTIPLEXER
B[0]
B[1]
B[2]
B[3]
B[0..3]
Connect to symbol bus connection this way
Mapping is one to one B[0]-->C[0], B[1]-->C[1], etc
exmacro
C[0..3]
D[0..3]
inst3
OUTPUT
LED[0..3]