University of Michigan
EECS 311: Electronic Circuits
Fall 2009
Review for Quiz #1

R1.1 Derive the Thevenin equivalent voltage and resistance seen by Vout in the circuit below.

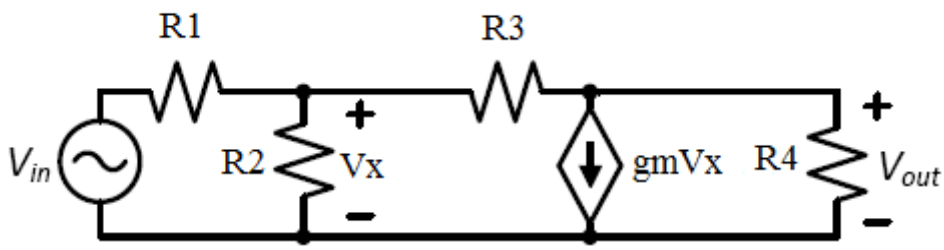

R1.2 Sketch the asymptotic Bode plot (magnitude and phase) for the following transfer function.

$$H(s) = \frac{1000(s+10)}{(s+100)(s^2+2s+1)}$$

R1.3 Use the follow S&K topology to design a bandpass filter with the following specifications:

h = -20
wn = 100kHz
d = 1/7

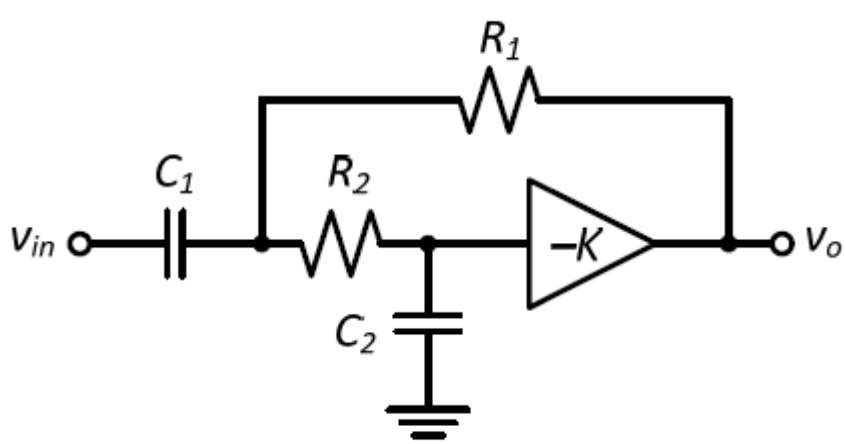

R1.4 Derive the CMRR of the following circuit.

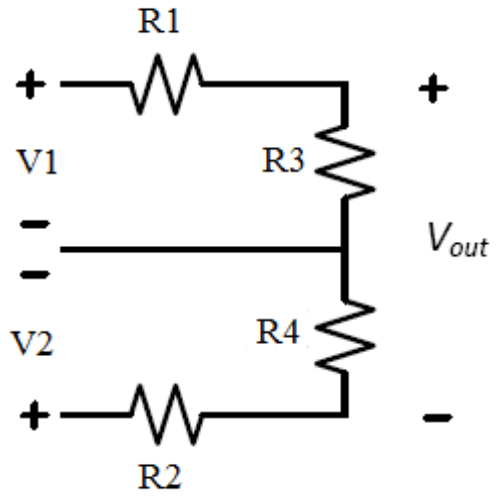

R1.5 Given a first order step response, with a rise time tr = 100ns and a final value of 1, will a system intended to produce this output be able to, when its slew rate is 20 V/μs? What value of τ will put the step response just at the Slew Rate?

R1.6 Find Id through the transistor below. Vtn = 1V, λ = 0, Kn = 60μA/V^2

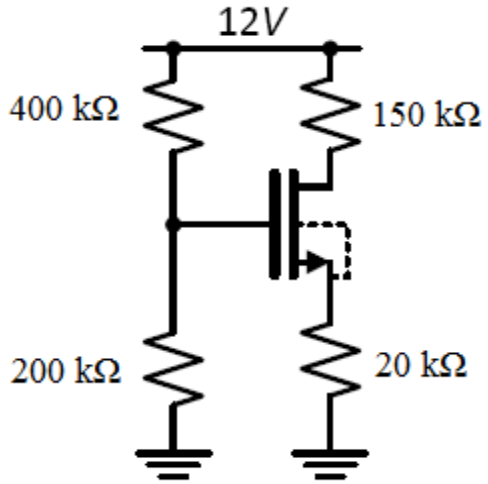

R1.7 Using the Constant voltage drop model with Von = 0.6 V, sketch a plot of Vout vs. time when Vin = A*sin(wo*t).