University of Michigan
EECS 311: Electronic Circuits
Fall 2009

LAB 1 – ACTIVE FILTERS

Issued 9/21/2009
Pre-Lab Completed 9/28/2009
Report Due in Lecture 10/5/2009

Introduction

In this lab you will design a 4th-order Butterworth low-pass filter. The filter will be comprised of two Sallen-Key filter stages. The specifications of the filter are given in the table below.

Specification	Value
Filter type	4th-order Low-Pass Butterworth
Pass-Band Gain	1 V/V
-3dB Cutoff Frequency (f_{3dB})	10 kHz

Table 1. Lab 1 filter specifications.

In the prelab, you will design the filter, choosing components values available in the 311 lab, and then simulate your circuit in Cadence. The in-lab assignment involves building and characterizing the filter. In the post-lab, you will answer questions on your measurement results, and re-simulate your design in Cadence.

Pre-Lab Exercises

P1.1 The pole locations for a 4th-order Butterworth lowpass filter are shown in Figure 1. Poles p_1 and p_2 are complex conjugates, and poles p_3 and p_4 are complex conjugates. The magnitude of all poles is $|p_k| = \omega_{3dB}$ (ω_{3dB} is the 3dB cutoff frequency). The angles of the poles are shown in the figure. These poles are given by the following expressions.

$$p_{1,2} = \omega_{3dB}\left(\cos\left(\frac{\pi}{8}\right) \pm j\sin\left(\frac{\pi}{8}\right)\right)$$

$$p_{3,4} = \omega_{3dB}\left(\cos\left(\frac{3\pi}{8}\right) \pm j\sin\left(\frac{3\pi}{8}\right)\right)$$

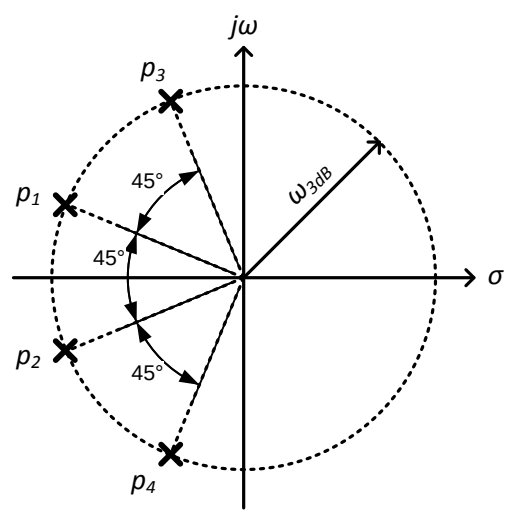

Figure 1. Pole locations for a 4th-order Butterworth low-pass filter.

a) The transfer function for this filter can be expressed as

$$\mathrm{H}(s) = \frac{1}{\left(\frac{s}{p_1}+1\right)\left(\frac{s}{p_2}+1\right)\left(\frac{s}{p_3}+1\right)\left(\frac{s}{p_4}+1\right)}$$

However, we will implement this 4th-order filter as two cascaded 2nd-order Sallen-Key filters. This form is given by the expression below, where the transfer function is broken up into two 2nd-order functions.

$$H(s) = \underbrace{\frac{1}{\left(\frac{s}{p_1}+1\right)\left(\frac{s}{p_2}+1\right)}}_{\text{Filter Stage 1}} \cdot \underbrace{\frac{1}{\left(\frac{s}{p_3}+1\right)\left(\frac{s}{p_4}+1\right)}}_{\text{Filter Stage 2}}$$

Substitute in for the values of the poles to implement the Butterworth filter (given above). Multiply out the two 2nd-order transfer functions, and find the values of ω_n for each filter stage. Normalize the transfer functions and find the values of d for each filter stage.

b) Plot the (un-normalized) transfer function $H(s)$ in Matlab and verify it meets the specifications given in Table 1. Turn in this plot and label the passband gain, the 3dB cutoff frequency, and the slope of the rolloff (in dB/decade).

P1.2 The 4th-order filter will be implemented with two Sallen-Key filter stages that are cascaded (connected in series), as shown in Figure 2.

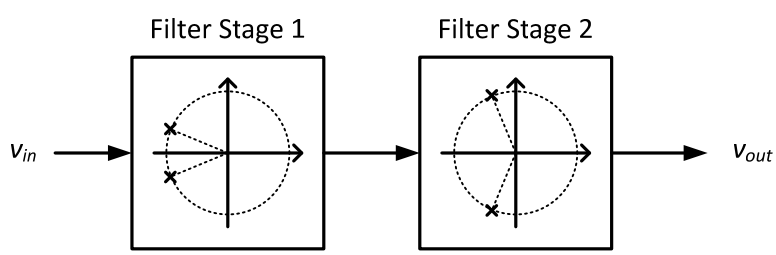

Figure 2. Two-stage filter implementation.

a) Design the first filter stage, *Filter Stage 1*, to give you poles $p_{1,2}$ of the filter. Use the Sallen-Key topology shown in Figure 3. Refer to the Sallen & Key paper to choose value for the components.

http://www.eecs.umich.edu/courses/eecs311/f09/handouts/1955_sallen_key.pdf

Choose values for R_1, R_2, C_1, and C_2 for the first filter stage given your calculations for ω_n and d for the first filter stage from P2.1 a).

Use only R,C component values that are available in the 311 lab. A list of these components can be found at the following website.

http://www.eecs.umich.edu/courses/eecs311/f09/labs.html

Suggestion: There is no single solution to this design, you'll be free to choose R and C values, so choose reasonable values. Do not use electrolytic or Tantalum capacitors, they are polarized.

b) Design the second filter stage, *Filter Stage 2*, to give you poles $p_{3,4}$ of the filter. Again, use the Sallen-Key topology shown in Figure 3. Choose values for R_1, R_2, C_1, and C_2 for the second filter stage given your calculations for ω_n and d for the second filter stage from P2.1 a).

Use only R,C component values that are available in the 311 lab.

Suggestion: same suggestions as in part a).

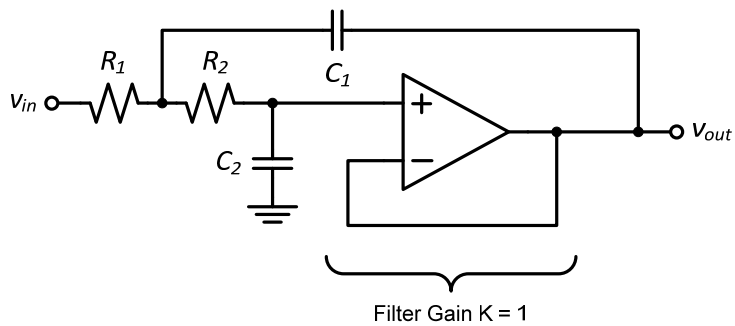

Figure 3. Sallen-Key filter used to implement each filter stage.

P1.3 In this problem you will build the entire filter in Cadence using the *lab1_opamp* component in the *EECS311Lib* library. Refer to the online Cadence tutorial for help with implementing any of the following parts.

http://www.eecs.umich.edu/courses/eecs311/f09/tutorials

a) Open Cadence and create a new library called *lab1*. Create a new schematic cellview in this library called *prelab1_3b*.

b) Build the two stages filter stages separately on the same schematic in Cadence. Do not wire them together in series yet. Connect a separate DC voltage source (*AnalogLib > vdc*) to the input of each stage, as illustrated in Figure 4. Give these sources a DC amplitude of 0V and an AC amplitude of 1V. Label the output nets of the stages *vo1*, *vo2*.

Perform an AC simulation from 1Hz to 10MHz. Plot the magnitude of the two output voltages *vo1*, and *vo2* on the same plot. Print this plot and turn it in, and label the passband gains and 3dB cutoff frequencies on the curves. If there is any peaking in the response, label the frequency and amplitude of the peak.

Note: Why does a plot of the AC output voltage give us the transfer function of the circuit? This is because when you specify the input AC magnitude of the *vdc* component to be 1V, then $V_{in} = 1V$. The transfer function is defined as $H(s) = V_{out}/V_{in}$, where $V_{in} = 1$, therefore $H(s) = V_{out}$. So, plotting V_{out} when $V_{in} = 1V$ gives us the transfer function.

c) You will now wire the two stages together in series, as shown in Figure 2. It may help to copy the cellview to preserve your work from part b). To do this, open the *Library Manager*, select the *prelab1_3b* cell name so that it is highlighted and right-click on it.

Select the *Copy* function from the pop-up menu. Give the copy a new cell name of *prelab1_3c* and click OK.

Open the copied schematic for editing and proceed to wire the stages together. You will need to remove the *vdc* source driving the input of the 2nd filter stage that was added in part b).

Perform an AC simulation from 1Hz to 10MHz. Plot the magnitude of the output voltage. Verify that this response closely matches the specifications in Table 1. Print this plot and turn it in, and label the passband gain and 3dB cutoff frequency on the plot. If there is any peaking in the response, label the frequency and amplitude of the peak.

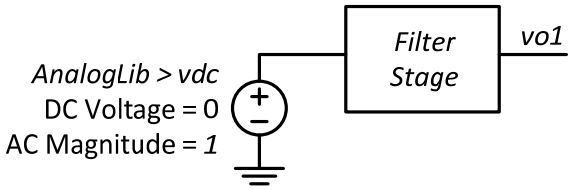

Figure 4. Example Cadence schematic for P1.3b.

In-Lab Exercises

You will now build your 4th-order Butterworth using the LM741 opamp in the topologies designed in the prelab. For each opamp, be sure to properly decouple the power supply pins with capacitors as shown in Figure 5.

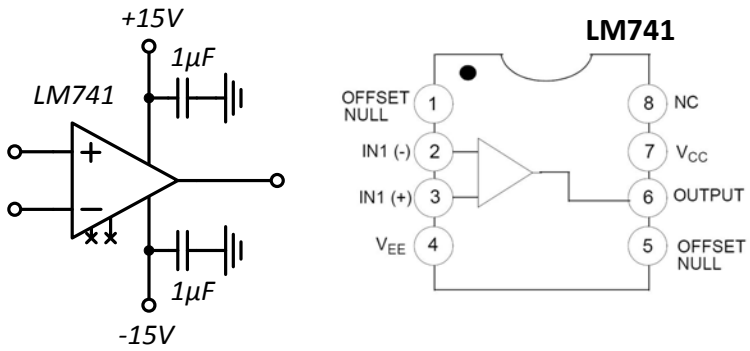

Figure 5. Power supply decoupling and pinout of LM741 opamp.

L1.1 It is very difficult to debug a large circuit all at once, therefore you will build your filter in stages and test each stage individually. Once the two stages are verified, you will wire them together. Build the first filter stage, *Filter Stage 1*, using the component values you chose in prelab P1.2 a).

a) Use a multimeter to measure the exact values of all resistors you use. Use the HP4275A LCR Meter to measure the exact values of all capacitors you use. Refer to the online tutorial for instructions on using the LCR meter. Record them in the report.

http://www.eecs.umich.edu/courses/eecs311/f09/tutorials/hp4275a.html

b) Build the first filter stage using an LM741 from your lab kit. Connect the input of the filter stage to the function generator configured as a sine wave, 100mVppk, and high-Z mode. Using both channels on the oscilloscope, simultaneously measure the input and output voltages. Record the input and output amplitudes from 1kHz to 1MHz in logarithmic steps of 3 points per decade. Additionally measure the 3dB frequency. If there is peaking in the frequency response, measure the frequency of the peak and the input and output voltages at that frequency.

L1.2 For this part, build the second filter stage, *Filter Stage 2*, using the component values you chose in prelab P1.2 b). For now, keep this circuit separate from the first filter stage.

a) Use a multimeter to measure the exact values of resistors, and the HP4275A LCR Meter to measure the exact values of capacitors that you use. Record them in the report.

b) Build the second filter stage using another LM741 from your lab kit. Do not alter your circuit from L2.1. Connect the input of the second filter stage to the function generator configured as a sine wave, 100mVppk, and high-Z mode. Using both channels on the oscilloscope, simultaneously measure the input and output voltages. Record the input and output amplitudes from 1kHz to 1MHz in logarithmic steps of 3 points per decade. Additionally measure the 3dB frequency. If there is peaking in the frequency response, measure the frequency of the peak and the input and output voltages at that frequency.

c) Show your two filter stages to the GSI.

L1.3 Connect the two stages together as shown in Figure 2. Connect the input of the first filter stage to the function generator configured as a sine wave, 100mVppk, and high-Z mode. Using both channels on the oscilloscope, simultaneously measure the input and output voltages. Record the input and output amplitudes from 1kHz to 1MHz in logarithmic steps of 3 points per decade. Additionally measure the 3dB frequency. If there is peaking in the frequency response, measure the frequency of the peak and the input and output voltages at that frequency.

Show your final filter circuit to the GSI.

University of Michigan
EECS 311: Electronic Circuits
Fall 2009

LAB 1 – PRE-LAB REPORT TEMPLATE

NAME: _____ LAB SECTION: _____

Pre-Lab Exercises

P1.1 Filter Stage 1: $\omega_n =$ _____ $d =$ _____

Filter Stage 2: $\omega_n =$ _____ $d =$ _____

Attach a Matlab plot of the frequency response.

P1.2 **Use only component values available in the 311 lab, listed at http://www.eecs.umich.edu/courses/eecs311/f09/labs.html**

a) Filter Stage 1 Design

R_1 = _____ R_2 = _____

C_1 = _____ C_2 = _____

b) Filter Stage 2 Design

R_1 = _____ R_2 = _____

C_1 = _____ C_2 = _____

P1.3 Attach Cadence AC response for parts b) and c).

University of Michigan
EECS 311: Electronic Circuits
Fall 2009

LAB 1 – CHECK-OFF SHEET

NAME: _____ LAB SECTION: _____

Have the GSI check you off on the following exercises after you have completed them. Be prepared to answer questions about your circuit or the results.

Exercise ..... Date Completed

P1.x Prelab Report Template....._____

L1.2 Filter stage 1 and 2 responses ....._____

L1.4 Complete filter response ....._____

University of Michigan
EECS 311: Electronic Circuits
Fall 2009

LAB 1 – REPORT TEMPLATE

NAME: _____ LAB SECTION: _____

Use the following lab report template to record your measurements. Use the space provided to answer questions.

Lab Report Template

L1.1 Filter Stage 1

a) Measured Filter Stage 1 component values:

R_1 = _____ R_2 = _____

C_1 = _____ C_2 = _____

b) Record the frequency response in the table below.

L1.2 Filter Stage 2

a) Measured Filter Stage 2 component values:

R_1 = _____ R_2 = _____

C_1 = _____ C_2 = _____

b) Record the frequency response in the table below.

L1.3 Record the frequency response in the table below.

	L1.1	**L1.2**	**L1.3**
1kHz [V_{IN} / V_O]	/	/	/
2kHz [V_{IN} / V_O]	/	/	/
5kHz [V_{IN} / V_O]	/	/	/
10kHz [V_{IN} / V_O]	/	/	/
20kHz [V_{IN} / V_O]	/	/	/
50kHz [V_{IN} / V_O]	/	/	/
100kHz [V_{IN} / V_O]	/	/	/
200kHz [V_{IN} / V_O]	/	/	/
500kHz [V_{IN} / V_O]	/	/	/
1MHz [V_{IN} / V_O]	/	/	/
3dB cutoff freq [Hz]			
If peaking is observed, complete the following rows			
Frequency of peak [Hz]			
Amp at peak [V_{IN} / V_O]	/	/	/

Post-Lab Exercises

S1.1 Calculate the measured $|H(s)|$ for each filter stage from your measurements (L1.1 – L1.2) in the table above. Put these points into Matlab and plot the frequency responses of each filter stage on the same graph. Attach the plot to your report, labeling the passband gain, 3dB cutoff frequency, and peak frequency and magnitude if any peaking exists.

Compare the cutoff frequencies, passband gains, and peaking if any exists between your measured results and your plot from prelab exercise P1.3 b). Did the measured results match simulations?

S1.2 Is this problem, you will resimulate your circuit in Cadence using the measured component values from lab. Open Cadence, then the Library Manager, and copy your *prelab1_3c* to a cell name *postlab1_2*. Replace the value of each resistor and capacitor in your filter with the measured values from L1.1 – L1.2.

Perform an AC simulation from 1Hz to 10MHz. Plot the magnitude of the output voltage. Print this plot, and label the passband gain and 3dB cutoff frequency on the plot. If there is any peaking in the response, label the frequency and amplitude of the peak. In the next part you will sketch the measured response on top of this graph.

S1.3 Calculate the measured $|H(s)|$ for the complete filter from your measurements (L1.3) in the table above. Using the graph printed for exercise S1.2, manually sketch the frequency response of the measured filter on top of the simulated response. Hand in this graph.

In the space below, briefly comment on the measured and simulated response, and compare both to the desired specifications given in Table 1. What do you think is the source of any differences in frequency response?