Chapter 3

Representation of Bandpass Signals

Let $x(t)$ be a signal with Fourier Transform $X(f)$. We say that $x(t)$ is *narrowband* about f_c of bandwidth W if $f_c \gg W$ and

$$X(f) = 0, \quad |f - f_c| > W, \ |f + f_c| > W.$$

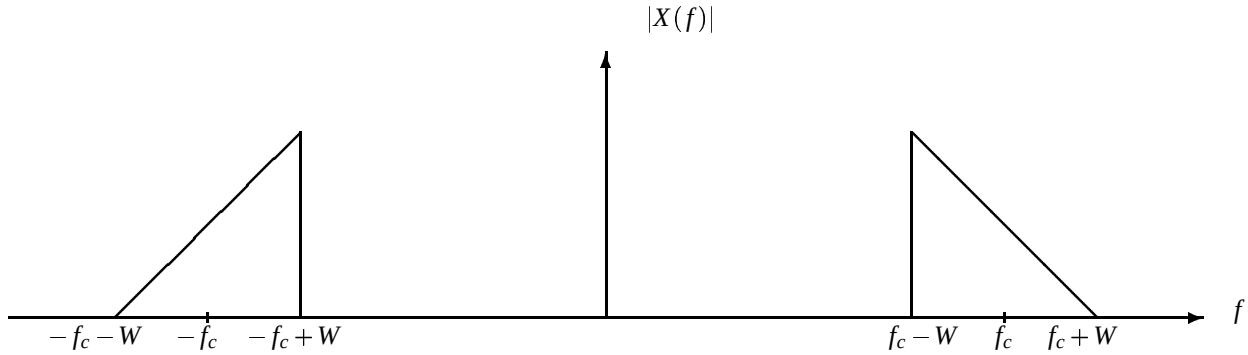

Let $g_{LP}(t)$ be the impulse response of an ideal low pass filter

$$G_{LP}(f) = \begin{cases} 1, & -W \le |f| \le W \\ 0, & \text{elsewhere.} \end{cases}$$

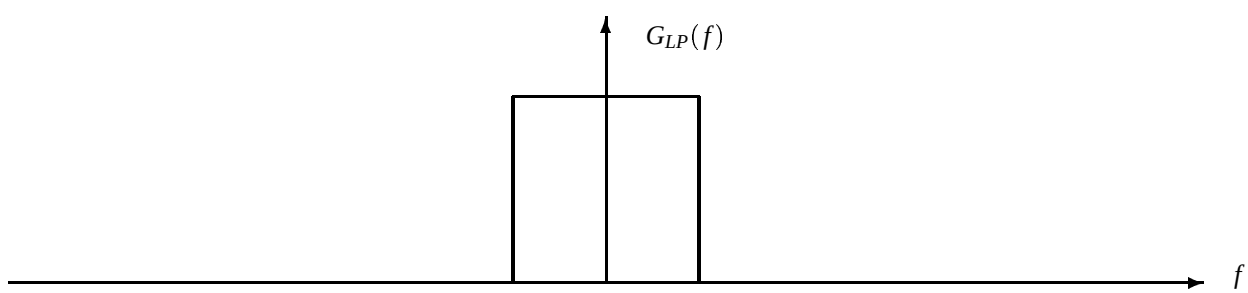

Let

$$x_c(t) = \int_{-\infty}^{\infty} x(t-u)\sqrt{2}\cos(2\pi f_c(t-u))g_{LP}(u)du$$

and

$$x_s(t) = \int_{-\infty}^{\infty} x(t-u)[-\sqrt{2}\sin(2\pi f_c(t-u))]g_{LP}(u)du$$

Claim:

$$x(t) = x_c(t)\sqrt{2}\cos(2\pi f_c t) - x_s(t)\sqrt{2}\sin(2\pi f_c t)$$

Proof: We will show that the following system is an ideal bandpass filter

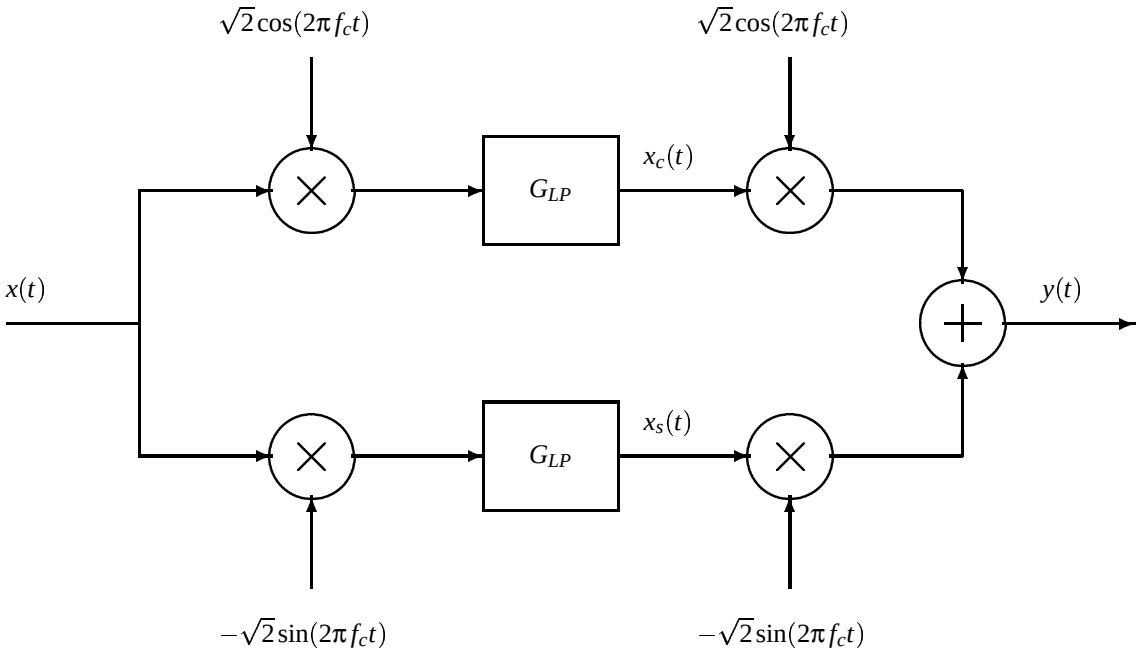

Figure 3.1: System for obtaining representations of bandpass signals

Let the input to the system be an impulse at time τ. The output is then

$$\begin{aligned}
y(t) &= 2\cos(2\pi f_c t)\int_{-\infty}^{\infty}\delta(u-\tau)\cos(2\pi f_c u)\; g_{LP}(t-u)du \\
&\quad + 2\sin(2\pi f_c t)\int_{-\infty}^{\infty}\delta(u-\tau)\sin(2\pi f_c u)\; g_{LP}(t-u)du \\
&= 2g_{LP}(t-\tau)\cos(2\pi f_c t)\cos(2\pi f_c \tau) + 2g_{LP}(t-\tau)\sin(2\pi f_c t)\sin(2\pi f_c \tau) \\
y(t) &= 2g_{LP}(t-\tau)\cos(2\pi f_c (t-\tau))
\end{aligned}$$

Since the output at time t due to an impulse at time τ depends only on $t-\tau$ the above system is time-invariant with impulse response

$$h(t) = 2g_{LP}(t)\cos(2\pi f_c t).$$

The Fourier transform of the impulse response is

$$\begin{aligned}
H(f) &= \int_{-\infty}^{\infty} h(t)e^{-j2\pi f t}dt \\
&= \int_{-\infty}^{\infty} 2g_{LP}(t)\cos(2\pi f_c t)\; e^{-j2\pi f t}dt \\
&= \int_{-\infty}^{\infty} 2g_{LP}(t)\left[\frac{e^{j2\pi f_c t}+e^{-j2\pi f_c t}}{2}\right] e^{-j2\pi f t}dt \\
&= \int_{-\infty}^{\infty} g_{LP}(t)\left[e^{-j2\pi(f-f_c)t}+e^{-j2\pi(f+f_c)t}\right] dt \\
&= \int_{-\infty}^{\infty} g_{LP}(t)e^{-j2\pi(f-f_c)t}dt + \int_{-\infty}^{\infty} g_{LP}(t)e^{-j2\pi(f+f_c)t}dt \\
&= G_{LP}(f-f_c) + G_{LP}(f+f_c) \\
&= \begin{cases} 1 & -W \le f-f_c \le W \\ & \text{or} \\ & -W \le f+f_c \le W \\ 0 & \text{elsewhere} \end{cases} \\
&= \begin{cases} 1 & f_c - W \le f \le f_c + W \\ 1 & -f_c - W \le f \le -f_c + W \\ 0 & \text{elsewhere} \end{cases}.
\end{aligned}$$

So the above system is bandpass. Hence for signals which are narrowband we can write

$$x(t) = x_c(t)\sqrt{2}\cos(2\pi f_c t) - x_s(t)\sqrt{2}\sin(2\pi f_c t) \quad .$$

$$x_L(t) = x_c(t) + jx_s(t) \quad .$$

$$x(t) = \mathrm{Re}[x_L(t)\sqrt{2}e^{j2\pi f_c t}].$$

The envelope of the bandpass waveform is

$$x_e(t) = \sqrt{x_c^2(t) + x_s^2(t)}.$$

The phase of the bandpass waveform is

$$\theta(t) = \tan^{-1}\left(\frac{x_s(t)}{x_c(t)}\right)$$

$$x(t) = x_e(t)\sqrt{2}\cos(2\pi f_c t + \theta(t))$$

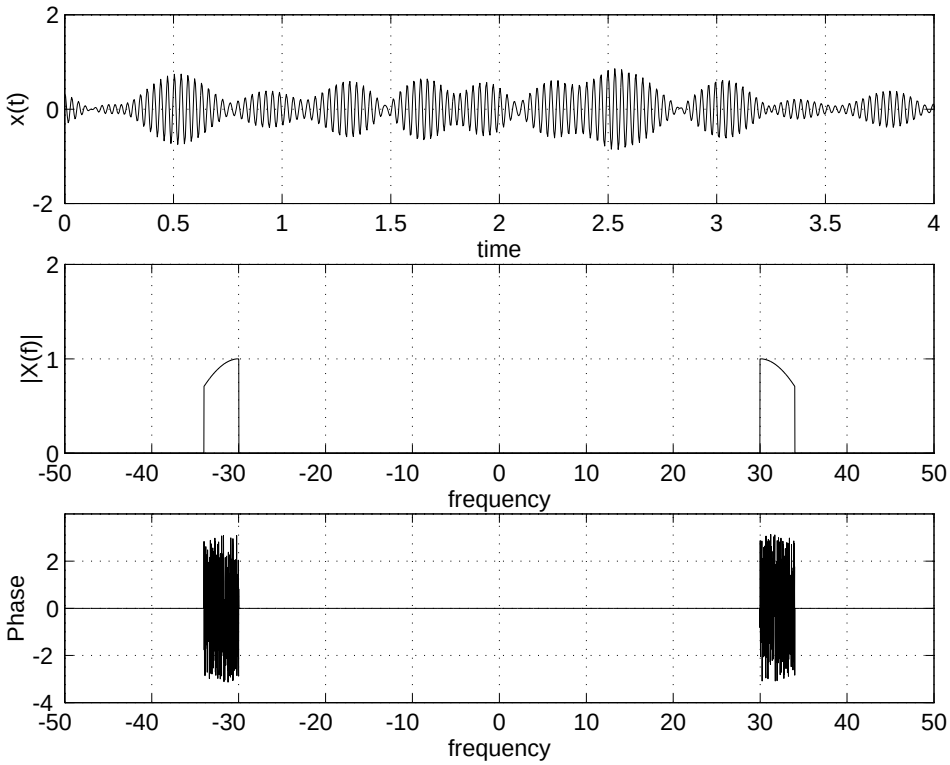

Figure 3.2: Bandpass signal representation

Also

$$
\begin{aligned}
X_c(f) &= \frac{1}{\sqrt{2}}[X(f-f_c)+X(f+f_c)]\,G_{LP}(f) \\
X_s(f) &= \frac{1}{j\sqrt{2}}[X(f+f_c)-X(f-f_c)]\,G_{LP}(f)
\end{aligned}
$$

Below we illustrate this representation for a simple example. Figure 1.2 shows a signal that is bandlimited to the frequency range 30-34Hz. The top figure is the time domain representation while the bottom two are the magnitude and phase in the frequency domain. Figure 1.3 shows the signals after mixing with the sinusoids. It is clear that there is a baseband term and a double frequency term. Figure 1.4 shows the signal after low pass filtering. We now have a complex signal. Finally Figure 1.5 shows the reconstructed signal along with the envelope.

Now consider the signal

$$\hat{x}(t) = x_c(t)\sqrt{2}\sin(2\pi f_c t) + x_s(t)\sqrt{2}\cos(2\pi f_c t)$$

The spectrum of this signal is given by

$$
\begin{aligned}
\hat{X}(f) &= \frac{1}{j\sqrt{2}}[X_c(f-f_c)-X_c(f+f_c)]+\frac{1}{\sqrt{2}}[X_s(f-f_c)+X_s(f+f_c)] \\
&= \frac{1}{2j}\{[X(f-2f_c)+X(f)]G_{LP}(f-f_c)-[X(f)+X(f+2f_c)]G_{LP}(f+f_c)\} \\
&\quad +\frac{1}{2j}\{[X(f)-X(f-2f_c)]G_{LP}(f-f_c)+[X(f+2f_c)-X(f)]G_{LP}(f+f_c)\} \\
&= \frac{1}{j}\{X(f)G_{LP}(f-f_c)-X(f)G_{LP}(f+f_c)\}
\end{aligned}
$$

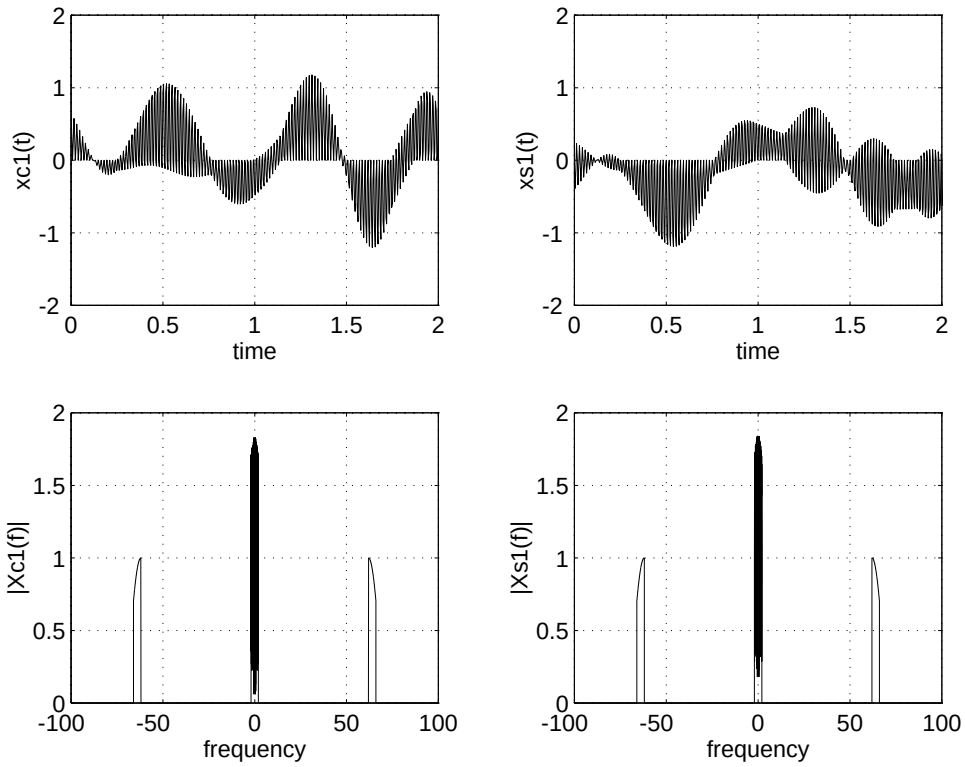

Figure 3.3: Bandpass signal representation

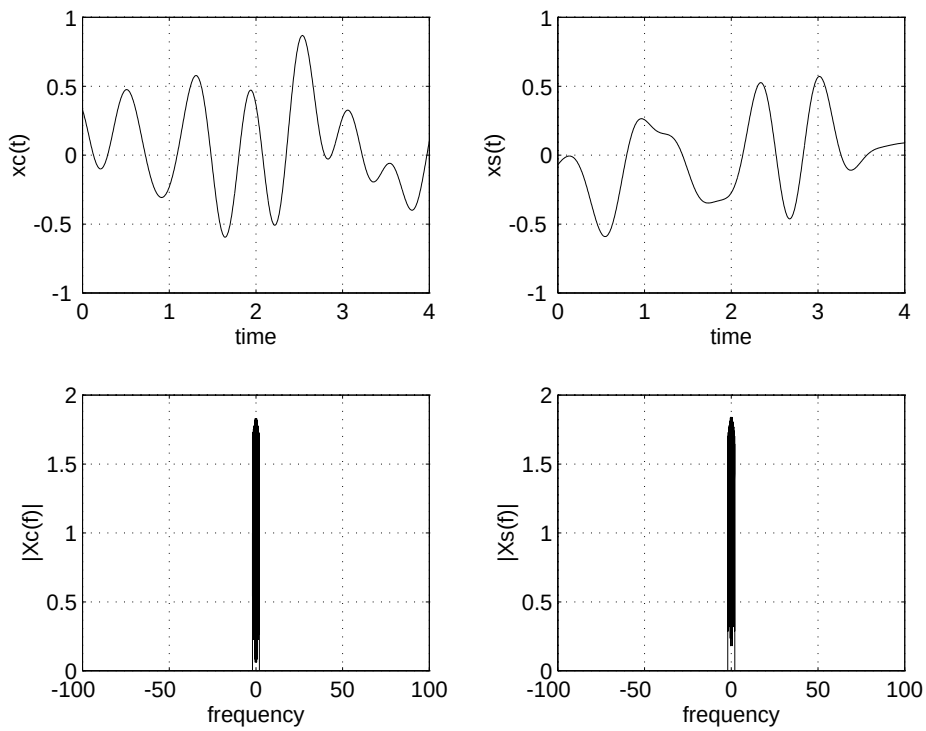

Figure 3.4: Bandpass signal representation

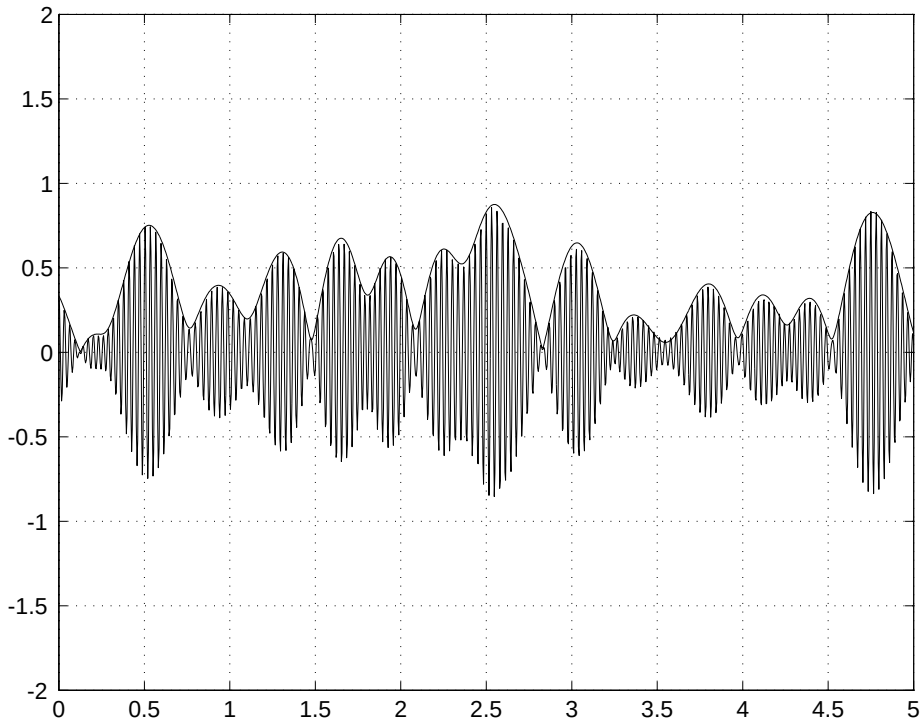

Figure 3.5: Bandpass signal representation

Essentially the signal $\hat{x}$ has the negative frequencies multiplied by $+j$ (shifted by $\pi/2$) and the positive frequencies multiplied by $-j$ (shifted by $-\pi/2$). This is called the Hilbert transform of the original signal x.

Now consider the signal $x(t) + j\hat{x}(t)$. This signal has spectrum

$$\begin{aligned} X(f) + j\hat{X}(f) &= X(f)G_{LP}(f - f_c) + X(f)G_{LP}(f + f_c) \\ &\quad + X(f)G_{LP}(f - f_c) - X(f)G_{LP}(f + f_c) \\ &= 2X(f)G_{LP}(f - f_c) \end{aligned}$$

Thus the above signal has only positive frequencies. The signal $\hat{x}(t)$ is useful when considering single-sideband systems.

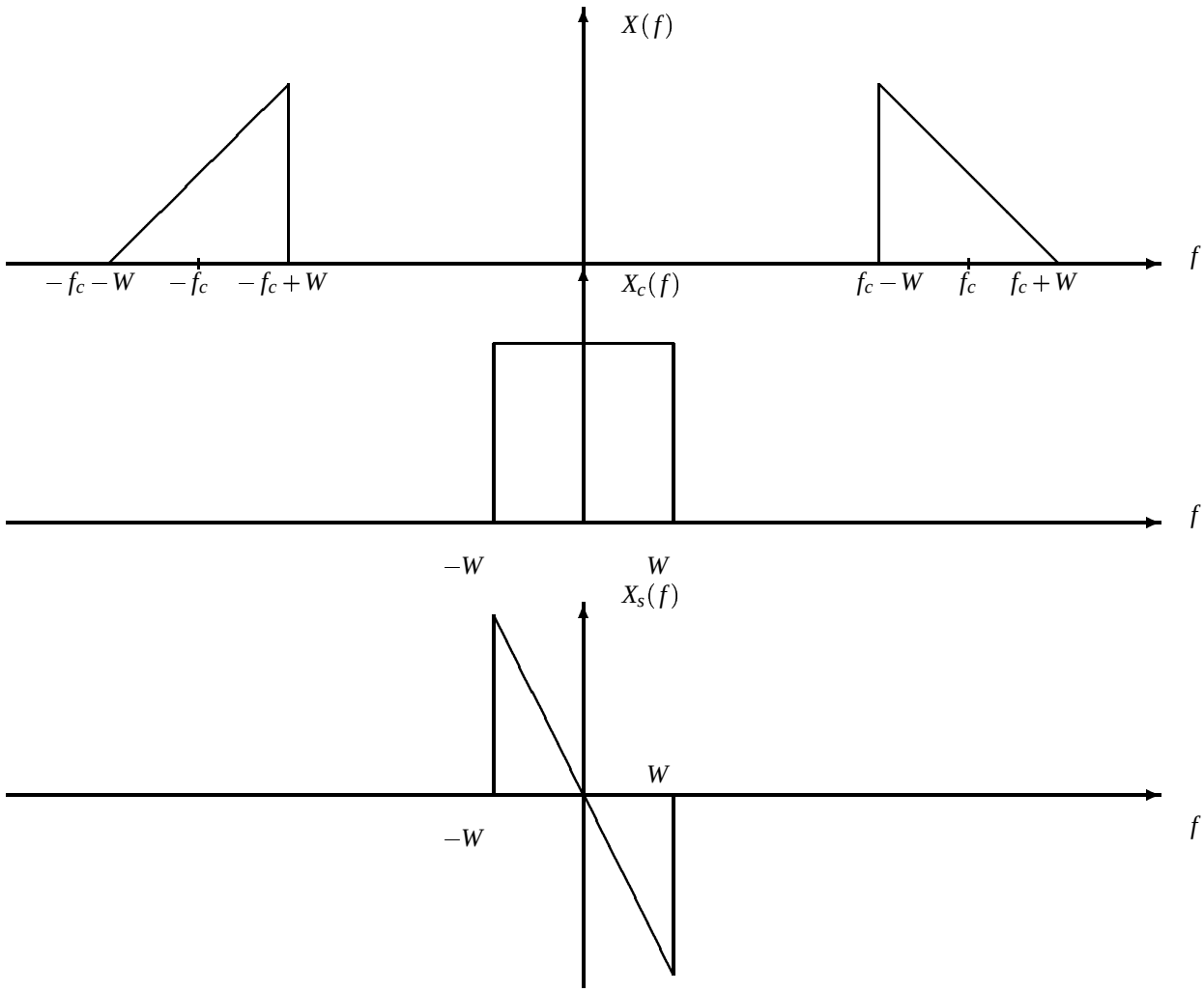

Figure 3.6: Alternative representation of lowpass equivalent signals using Hilbert transforms.

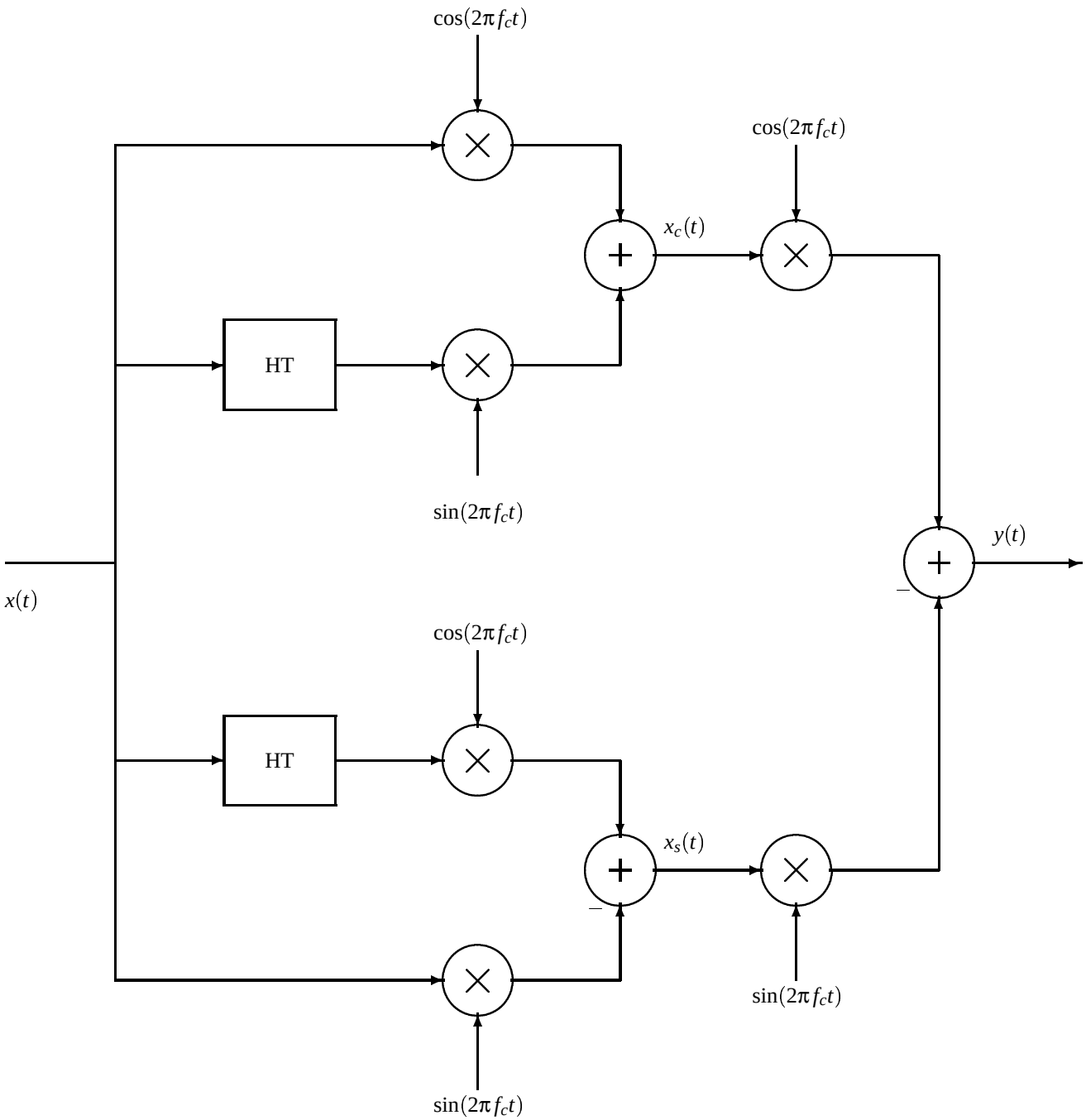
cos(2πf_c t)
cos(2πf_c t)
x_c(t)
HT
sin(2πf_c t)
y(t)
x(t)
cos(2πf_c t)
HT
x_s(t)
sin(2πf_c t)
sin(2πf_c t)

$$
\begin{aligned}
x_c(t) &= \int_{-\infty}^{\infty} x(t-u)\sqrt{2}\cos(2\pi f_c(t-u))g_{LP}(u)du \\
x_s(t) &= \int_{-\infty}^{\infty} x(t-u)[-\sqrt{2}\sin(2\pi f_c(t-u))]g_{LP}(u)du \\
x(t) &= x_c(t)\sqrt{2}\cos(2\pi f_c t) - x_s(t)\sqrt{2}\sin(2\pi f_c t) \\
x_L(t) &= x_c(t) + jx_s(t) \\
x(t) &= \mathrm{Re}[x_L(t)\sqrt{2}e^{j2\pi f_c t}] \\
x_e(t) &= \sqrt{x_c^2(t) + x_s^2(t)} \\
\theta(t) &= \tan^{-1}\left(\frac{x_s(t)}{x_c(t)}\right) \\
x(t) &= x_e(t)\cos(2\pi f_c t + \theta(t)) \\
X_c(f) &= [X(f-f_c) + X(f+f_c)]\, G_{LP}(f) \\
X_s(f) &= \frac{1}{j}[X(f+f_c) - X(f-f_c)G_{LP}(f)]
\end{aligned}
$$

Representation of Narrowband Random Processes

The representation of narrowband signals can also be applied to narrowband stationary processes. A stationary random process $n(t)$ is said to be narrowband if the power spectral density $S_n(f)$ satisfies

$$S_n(f) = 0 \quad |f - f_c| > W \quad |f + f_c| > W.$$

It is clear then that we can represent $n(t)$ as

$$n(t) = n_c(t)\cos(2\pi f_c t) - n_s(t)\sin(2\pi f_c t)$$

where

$$n_c(t) = \int_{-\infty}^{\infty} 2\, n(u)\cos(2\pi f_c u)\, g_{LP}(t-u)du$$

and

$$n_s(t) = \int_{-\infty}^{\infty} 2\, n(u)\sin(2\pi f_c u)\, g_{LP}(t-u)du.$$

Let $n(t)$ have zero mean and autocorrelation function (also covariance) $K_n(s,t) = K_n(t-s)$.

We define the complex random processes $z(t)$ and $v(t)$ as

$$z(t) = n_c(t) + jn_s(t)$$

and

$$\begin{aligned} v(t) &= 2\, n(t)\cos(2\pi f_c t) - j2\, n(t)\sin(2\pi f_c t) \\ &= 2\, e^{-j2\pi f_c t} n(t) \ . \end{aligned}$$

Clearly

$$z(t) = \int_{-\infty}^{\infty} g_{LP}(t-u)v(u)du$$

$$S_z(f) = |G_{LP}(f)|^2 S_v(f)$$

Claim:

$$S_z(f) = 4S_n(f - f_c)G_{LP}(f)$$

Proof:

$$\begin{aligned} K_v(s,t) &= E[v(s)v^*(t)] \\ &= 4e^{-j2\pi f_c(s-t)}E[n(s)n(t)] \\ &= 4e^{-j2\pi f_c(s-t)}K_n(t-s) = 4e^{j2\pi f_c\tau}K_n(\tau) \end{aligned}$$

where $\tau = t - s$.

The power spectral density of $v(t)$ is

$$\begin{aligned} S_v(f) &= \int_{-\infty}^{\infty} K_v(\tau)e^{-j2\pi f\tau}d\tau \\ &= 4\int_{-\infty}^{\infty} e^{j2\pi f_c\tau}K_n(\tau)e^{-j2\pi f\tau}d\tau \\ &= 4\int_{-\infty}^{\infty} K_n(\tau)e^{-j2\pi(f-f_c)\tau}d\tau = 4S_n(f-f_c) \end{aligned}$$

Now it is clear that

$$\begin{aligned} S_z(f) &= 4S_n(f-f_c)|G_{LP}(f)|^2 \\ &= 4S_n(f-f_c)G_{LP}(f) \end{aligned}$$

Note that $S_z(f) = 0 \quad |f| > W$.

Hence

$$\begin{aligned} K_z(\tau) &= \int_{-\infty}^{\infty} 4S_n(f-f_c)G_{LP}(f)e^{j2\pi f\tau}df \\ &= \int_{-W}^{W} 4S_n(f-f_c)e^{j2\pi f\tau}df \end{aligned}$$

Claim:

$$E[z(s)z(t)] = 0 \quad \forall s,t$$

Proof:

$$\begin{aligned} E[z(s)z(t)] &= E[\int_{-\infty}^{\infty} g_{LP}(s-u_1)v(u_1)du_1 \int_{-\infty}^{\infty} g_{LP}(t-u_2)v(u_2)du_2 \\ &= \int_{-\infty}^{\infty}\int_{-\infty}^{\infty} g_{LP}(s-u_1)g_{LP}(t-u_2)E[v(u_1)v(u_2)]du_1du_2 \\ &= \int_{-\infty}^{\infty}\int_{-\infty}^{\infty} g_{LP}(s-u_1)g_{LP}(t-u_2)E[4e^{[-j\omega_c(u_1+u_2)}n(u_1)n(u_2)]du_1du_2 \\ &= \int_{-\infty}^{\infty}\int_{-\infty}^{\infty} g_{LP}(s-u_1)g_{LP}(t-u_2)4e^{-j\omega_c(u_1+u_2)}E[n(u_1)n(u_2)]du_1du_2 \\ &= \int_{-\infty}^{\infty}\int_{-\infty}^{\infty} g_{LP}(s-u_1)g_{LP}(t-u_2)\frac{4e^{-j\omega_c(u_1+u_2)}}{2\pi}\int_{-\infty}^{\infty} S_n(\omega)e^{j\omega(u_2-u_1)}d\omega du_1du_2 \\ &= \frac{2}{\pi}\int_{-\infty}^{\infty} S_n(\omega)\int_{-\infty}^{\infty} g_{LP}(s-u_1)e^{-ju_1(\omega_c+\omega)}du_1\int_{-\infty}^{\infty} g_{LP}(t-u_2)e^{-ju_2(\omega_c-\omega)}du_2d\omega \end{aligned}$$

Now

$$\begin{aligned} &\int_{-\infty}^{\infty} g_{LP}(s-u_1)e^{-ju_1(\omega_c+\omega)}du_1 = \int_{-\infty}^{\infty} g_{LP}(u_1)e^{-j(s-u_1)(\omega_c+\omega)}du_1 \\ &= \int_{-\infty}^{\infty} g_{LP}(u_1)e^{+ju_1(\omega_c+\omega)}du_1e^{-js(\omega_c+\omega)} \\ &= G_{LP}(-\omega-\omega_c)e^{-js(\omega_c+\omega)} = G_{LP}(\omega+\omega_c)e^{-js(\omega_c+\omega)} \end{aligned}$$

Similarly

$$\begin{aligned} \int_{-\infty}^{\infty} g_{LP}(t-u_2)e^{-ju_2(\omega_c-\omega)}du_2 &= \int_{-\infty}^{\infty} g_{LP}(u_2)e^{-j(t-u_2)(\omega_c-\omega)}du_2 \\ &= \int_{-\infty}^{\infty} g_{LP}(u_2)e^{ju_2(\omega_c-\omega)}du_2e^{-j(u_c-\omega)} \\ &= G_{LP}(\omega_c-\omega)e^{-jt(\omega_c-\omega)} \\ &= G_{LP}(\omega-\omega_c)e^{-jt(\omega_c-\omega)} \end{aligned}$$

So

$$E[z(t)z(s)] = \frac{2}{\pi}\int_{-\infty}^{\infty} S_n(\omega)\{G_{LP}(\omega+\omega_c)G_{LP}(\omega-\omega_c)\}\exp\{-js(\omega_c+\omega)-jt(\omega_c-\omega)\}d\omega$$

But $G_{LP}(\omega+\omega_c)G_{LP}(\omega-\omega_c) = 0 \quad \forall\omega$

Thus

$$E[z(s)z(t)] = 0 \quad \forall s,t$$

Using the above result we can obtain relations between the correlation functions for $n_c(t)$ and $n_s(t)$ as follows.

$$\begin{aligned} 0 = E[z(s)z(t)] &= E[n_c(s)+jn_s(s))(n_c(t)+jn_s(t))] \\ &= K_{n_c}(s,t) - K_{n_s}(s,t) + j(K_{n_c,n_s}(s,t) + K_{n_s,n_c}(s,t)) \end{aligned}$$

Since the real and imaginary parts each must be zero we have that

$$\begin{aligned} K_{n_c}(s,t) &= K_{n_s}(s,t) \\ K_{n_c,n_s}(s,t) &= -K_{n_s,n_c}(s,t) \end{aligned}$$

$$\begin{aligned} K_z(s,t) = E[z(s)z^*(t)] &= E[(n_c(s)+jn_s(s))(n_c(t)-jn_s(t))] \\ &= K_{n_c}(s,t)+K_{n_s}(s,t)+j(K_{n_s,n_c}(s,t)-K_{n_c,n_s}(s,t)) \\ &= 2K_{n_c}(s,t)+j(2K_{n_s,n_c}(s,t)) \end{aligned}$$

From the above the below facts become obvious.
Facts:

$$\boxed{\begin{aligned} K_{n_c}(\tau) &= \frac{1}{2}\,\mathrm{Re}\,[K_z(\tau)] \\ K_{n_s}(\tau) &= \frac{1}{2}\,\mathrm{Re}\,[K_z(\tau)] \\ K_{n_c,n_s}(\tau) &= E[n_c(t)n_s(t+\tau)] = \frac{1}{2}\,\mathrm{Im}\,K_z(\tau) \\ K_{n_s,n_c}(\tau) &= -K_{n_s,n_c}(\tau) \\ S_{n_c}(f) &= \frac{1}{2}\,\mathcal{F}[\mathrm{Re}[K_z(f)]] \\ &= \frac{1}{4}\,\mathcal{F}[K_z(\tau)+K_z^*(\tau)]] \\ &= \frac{1}{4}\,[S_z(f)+S_z(-f)] \\ &= [S_n(f-f_c)+S_n(-f-f_c)]G_{LP}(f) \\ &= [S_n(f-f_c)+S_n(f+f_c)]G_{LP}(f) \\ S_{n_s,n_c}(f) &= \frac{1}{2}\,\mathcal{F}[\mathrm{Im}[K_z(f)]] \\ &= [S_n(f-f_c)-S_n(-f-f_c)]G_{LP}(f) \\ S_{n_c,n_s}(f) &= -S_{n_s,n_c}(f) \end{aligned}}$$

In the Karhuenen-Loève Expansion of a complex process $X(t)$

$$Z_j = \int_a^b X(t)\varphi_j^*(t)dt$$

We showed that

$$E[Z_j] = 0 \quad \forall_j$$

$$E[Z_jZ_k^*] = \delta_{jk}\lambda_j$$

Now if $X(t)$ is a complex process determined from a *narrowband process* then $E[X(s)X(t)] = 0$ for all s,t so that

$$\begin{aligned} E[Z_jZ_k] &= E\left[\int_a^b X(s)\varphi_j^*(s)ds\int_a^b X(t)\varphi_k^*(t)dt\right] \\ &= \int_a^b\int_a^b \varphi_j^*(s)\varphi_k^*(t)E[X(s)X(t)]dsdt \\ &= 0 \quad \forall \quad j,k \ \ (\text{including } j=k) \end{aligned}$$

Let $Z_k = X_k + jY_k \quad j = \sqrt{-1}$ now

$$\begin{aligned} E[Z_k^2] = 0 \Rightarrow 0 &= E[(X_k + jY_k)^2] \\ &= E[X_k^2] - E[Y_k^2] + 2jE[X_kY_k] \end{aligned}$$

Thus $E[X_k^2] = E[Y_k^2]$ and $E[X_kY_k] = 0$

$$\begin{aligned} E[|Z_k|^2] = \lambda_k \quad \Rightarrow \quad & E[|Z_k|^2] = E[X_k^2] + E[Y_k^2] = \lambda_k \\ & \Rightarrow E[X_k^2] = \lambda_k/2 \\ & \qquad E[Y_k^2] = \lambda_k/2 \end{aligned}$$

The density of Z_k is then

$$\begin{aligned} f_{z_k}(z_k) &= \frac{1}{\sqrt{2\pi}\sqrt{\frac{\lambda_k}{2}}}\, e^{-x_k^2/2\frac{\lambda_k}{2}} \frac{1}{\sqrt{2\pi}\sqrt{\frac{\lambda_k}{2}}}\, e^{-y_k^2/2\frac{\lambda_k}{2}} \\ &= \frac{1}{\pi\lambda_k}\, e^{-|z_k|^2/\lambda_k} \end{aligned}$$

To determine the joint density function we need to determine the correlations between the real and imaginary parts of Z_k and Z_l. First observe the following identities.

If $u = u_R + ju_I$ and $w = w_R + jw_I$ then

$$u_Rw_R = \frac{1}{2}\mathrm{Re}[uw + uw^*]$$

and

$$u_Rw_I = \frac{1}{2}\mathrm{Im}[uw - uw^*]$$

Consider

$$E[\mathrm{Re}[Z_k]\mathrm{Re}[Z_l]] = \frac{1}{2}\mathrm{Re}E[Z_kZ_l - Z_kZ_l^*]$$

For $k \neq l$ both of these terms are zero. Now consider

$$E[\mathrm{Re}[Z_k]\mathrm{Im}[Z_l]] = \frac{1}{2}\mathrm{Im}E[Z_kZ_l - Z_kZ_l^*]$$

For $k \neq l$ both terms on the right are zero as shown above while for $k = l$ the first term is zero and the second term is purely real so the right hand side is zero. Thus we have independence among the Z's.

If the original (bandpass) process is (essentially) white with power spectrum $N_0/2$ then the complex (lowpass) representation will be (essentially) white with power spectrum N_0. Thus in the K-L representation Z_l will be (complex) Gaussian with mean zero and $E[|Z_l|^2] = N_0$. ($\lambda_l = N_0$). If the process is (real) white noise then the K-L representation will have $E[|Z_l|^2] = N_0/2$.

1. Problems

1. Let $\underline{X} = \begin{pmatrix} X_1 \\ X_2 \end{pmatrix}$ be jointly Gaussian with zero mean and covariance matrix

$$K = \begin{bmatrix} \sigma^2 & \sigma^2 \\ \sigma^2 & \sigma^2 \end{bmatrix}$$

Express $\underline{X}$ as W$\underline{Y}$ where W is a 2 by 2 orthogonal matrix and $\underline{Y} = \begin{pmatrix} Y_1 \\ Y_2 \end{pmatrix}$ where Y_1, and Y_2 are independent Gaussian random variables.

2. Let $X = X_1 + jX_2$, and $Y = X_3 + jX_4$ where (X_1, X_2, X_3, X_4) is a jointly Gaussian random vector with mean $\underline{0}$ and covariance

$$K = \begin{bmatrix} 1 & 0 & 0 & -1 \\ 0 & 1 & -1 & 0 \\ 0 & -1 & 1 & 0 \\ -1 & 0 & 0 & 1 \end{bmatrix}$$

Show that X and Y are uncorrelated but not independent.

3. Show that $K(s,t) = \min(s,t) s,t \geq 0$ is a nonnegative definite. (Hint: write $\min(s,t) = \int_0^\infty I_s(u) I_t(u) du$ where $I_x(y) = 1$ if $y \leq x$ and is 0 otherwise. Then interchange integrals)

4. Prove $P\{\cup_{i=1}^M A_i\} \leq \sum_{i=1}^M P\{A_i\}$.

5. Let $N_1, \ldots, N_n$ be independent identically distributed (i.i.d.) Gaussian random variables with mean zero and variance $N_0/2$. Let $\hat{N}_i = N_i/\sqrt{n}$. Show that for any $\Delta > 0$

$$\lim_{n\to\infty} P\left\{ \left| \sum_{i=1}^n \hat{N}_i^2 - N_0/2 \right| > \Delta \right\} = 0$$

6. Let H_0 and H_1 be two events. Let $p_i(x_1, \ldots, x_n)$ be the conditional density of $X_1, \ldots, X_n$ given H_i occurred.

(a) Assume that given H_i, $\{X_j\}_{j=1}^n$ is a sequence of i.i.d. Gaussian random variables with mean $(-1)^i\sqrt{E}$ and variance $N_0/2$. Use the Chernoff bound to show that

$$P\{p_1(\underline{X}) \geq p_0(\underline{X}) | H_0\} \leq e^{-nE/N_0}$$

(b) Now let $X_1, \ldots, X_n$ be independent discrete random variables taking values +1 and -1 with

$$\begin{aligned} P\{X_i = +1|H_0\} &= p, \\ P\{X_i = -1|H_0\} &= 1-p, \\ P\{X_i = -1|H_1\} &= p, \\ P\{X_i = +1|H_1\} &= 1-p. \end{aligned}$$

Thus if the number of components of $\underline{x}$ equal to +1 is d then $p_0(\underline{x}) = p^d(1-p)^{n-d}$ and $p_1(\underline{x}) = p^{n-d}(1-p)^d$. Use the Chernoff bound to show that

$$P\{p_1(\underline{X}) \geq p_0(\underline{X}) | H_0\} \leq e^{-n(-\ln\sqrt{4p(1-p)})}$$

(c) Again let $X_1, \ldots, X_n$ be independent discrete random variables with X_i taking nonnegative integer values only. Let

$$p_0(x_1, \ldots, x_n) = \prod_{i=1}^n \frac{\lambda_0^{x_i} e^{-\lambda_0}}{x_i!}, \quad x_i \geq 0, \quad 1 \leq i \leq n$$

and

$$p_1(x_1, \ldots, x_n) = \prod_{i=1}^n \frac{\lambda_1^{x_i} e^{-\lambda_1}}{x_i!}$$

If $\lambda_1 > \lambda_0$ find the best Chernoff bound on

$$P_{e,0} = P\{p_1(\underline{X}) \geq p_0(\underline{X}) | H_0\}$$

and

$$P_{e,1} = P\{p_0(\underline{X}) \geq p_1(\underline{X}) | H_1\}.$$

Let s_i^* be the optimal value of s for minimizing the bound to $P_{e,i}$. Show $s_1^* = 1 - s_0^*$.

(d) Again let $X_1, \ldots, X_{2n}$ be independent discrete random variables with X_i taking nonnegative integer values only. Let

$$p_0(x_1, \ldots, x_{2n}) = \prod_{i=1}^{n} \frac{\lambda_1^{x_i} e^{-\lambda_1}}{x_i!} \prod_{i=n+1}^{2n} \frac{\lambda_0^{x_i} e^{-\lambda_0}}{x_i!}, \quad x_i \geq 0, \quad 1 \leq i \leq 2n$$

and

$$p_1(x_1, \ldots, x_{2n}) = \prod_{i=1}^{n} \frac{\lambda_0^{x_i} e^{-\lambda_0}}{x_i!} \prod_{i=n+1}^{2n} \frac{\lambda_1^{x_i} e^{-\lambda_1}}{x_i!}$$

If $\lambda_1 > \lambda_0$ find the best Chernoff bound on

$$P_{e,0} = P\{p_1(\underline{X}) \geq p_0(\underline{X}) | H_0\}$$

and

$$P_{e,1} = P\{p_0(\underline{X}) \geq p_1(\underline{X}) | H_1\}.$$

7. (a) Show that $\sum_{i=1}^{\infty} \phi_i(t)\phi_i^*(s) = \delta(t-s)$ for any complete orthonormal set of functions $\phi_i(t)$. (Hint: Show that the above function satisfies the definition of a delta function, that

$$\int_{-\infty}^{\infty} f(t)\delta(t-s)dt \;=\; f(s)$$

for all functions $f(t)$).

(b) Let $K(s,t)$ be a positive covariance function of the zero mean Gaussian random process $X(t)$. Let $K^{-1/2}$ be the negative square root of this function as defined in class. Show that the process

$$Y(s) \;=\; \int K^{-1/2}(s,t)X(t)dt$$

is a white Gaussian noise process. (You need to show that $E[Y(s)Y^*(t)] = \delta(t-s)$).

8. Let $K(s,t)$ be a real covariance matrix of a random process with eigenvalues λ_i and (real) eigenfunctions ϕ_i. Define (as in class) $K^2(s,t)$ as

$$K^2(s,t) = \int K(s,u)K(u,t)du$$

and $K^n(s,t)$ as

$$K^n(s,t) = \int K^{n-1}(s,u)K(u,t)du.$$

Also define $e^K(s,t)$ as

$$e^{K(s,t)} = \sum_{n=0}^{\infty} \frac{K^n(s,t)}{n!}.$$

Show that

$$e^{K(s,t)} = \sum_{i=1}^{\infty} e^{\lambda_i}\phi_i(s)\phi_i(t).$$

9. A bandpass signal $x_1(t) = \mathrm{Re}[x_{L,1}(t)e^{\{j2\pi f_1 t\}}]$ has center frequency f_1 and bandwidth $W_1 \ll f_1$. It is desired to mix the signal up to frequency $f_2 \gg f_1$ and generate the signal $x_2(t) = \mathrm{Re}[x_{L,1}e^{\{j2\pi f_2 t\}}]$. The following methods are available

(i) Multiply the signal $x_1(t)$ by $\cos(2\pi(f_2 - f_1)t)$ and filter out the signal at frequency $f_2 - 2f_1$.

(ii) Generate the signal via $x_2(t) = x_1(t)\cos(2\pi(f_2 - f_1)t) - \hat{x}_1(t)\sin(2\pi(f_2 - f_1)t)$.

(iii) Generate the lowpass complex representation of $x_1(t)$ $(x_{1,c}(t), x_{1,s}(t))$. Then generate $x_2(t) = x_{1,c}(t)\cos(2\pi f_2 t) - x_{1,s}(t)\sin(2\pi f_2 t)$.

Show that each method does what is intended.

10. Show that the complex lowpass equivalent representation of a bandpass signal can be generated by

$$\begin{aligned} x_c(t) &= x(t)\cos(2\pi f_c t) + \hat{x}(t)\sin(2\pi f_c t) \\ x_s(t) &= \hat{x}(t)\cos(2\pi f_c t) - x(t)\sin(2\pi f_c t) \end{aligned}$$

11. Consider a bandpass signal of the form $x(t) = x_c(t)\cos(2\pi f_c t) - x_s(t)\sin(2\pi f_c t)$. It is desired to mix to baseband to recover $x_c(t)$ and $x_s(t)$. However, the local oscillators have a phase offset θ and so the local signals are instead $\cos(2\pi f_c t + \theta)$ and $\sin(2\pi f_c t + \theta)$. The signal is low pass filtered after mixing to baseband.

    (a) Determine the signals out of the two low pass filters.

    (b) If the phase is known to the receiver, determine how to recover the signals $x_c(t)$ and $x_s(t)$ from the filter outputs.

12. (a) Simulate and compare to analysis the performance of QPSK modulation for $E_b/N_0 = 0, 2, 4, 6, 8$ dB.

    (b) Simulate the performance of QPSK modulation with a local oscillator with phase error $\theta = 10$ degrees for $E_b/N_0 = 0, 2, 4, 6, 8$ dB. Can you analyze this system?

13. A bandpass signal is the input to a bandpass filter. The bandpass filter has impulse response as

$$h(t) = h_c(t)\cos(2\pi f_c t) - h_s(t)\sin(2\pi f_c t)$$

    while the input signal has lowpass complex equivalent representation

$$x(t) = x_c(t)\cos(2\pi f_c t) - x_s(t)\sin(2\pi f_c t).$$

    The output of the filter is

$$y(t) = y_c(t)\cos(2\pi f_c t) - y_s(t)\sin(2\pi f_c t).$$

    Determine the relation between $y_c(t)$, $y_s(t)$ and the input $x_c(t)$ and $x_s(t)$ and the filter $h_c(t)$ and $h_s(t)$.