Chapter 5

Noncoherent Receivers

In the previous chapters we assumed the receiver had perfect knowledge of the desired received signal except the transmitted data bits which we want to detect. In this chapter we consider the case where the receiver knows everything about the received signal except the data bits transmitted and the carrier phase. The approach is to treat the unknown phase as a random variable and then to average the likelihood of the received signal given the data bits and unknown phase with respect to the distribution of the phase. We begin by assuming a general carrier modulated waveform with M signals with arbitrary correlation. For this general signal set we derive the optimal receiver in the presence of additive Gaussian noise. We then derive the important special case of additive white Gaussian noise. It will be shown in the case of additive white Gaussian noise that the receiver can be implemented using an envelope detector. Next we derive an expression for the error probability of two signals in additive white Gaussian noise. In section 3 we derive the error probability for M-orthogonal signals in additive white Gaussian noise. Finally we derive expressions for the error probability of repetition codes with noncoherent reception.

1. Optimal Receiver in AGN

Assume additive stationary Gaussian noise and that $s_k(t)$ for $0 \le k \le M-1$ has the form

$$s_k(t) = a_k(t)\cos(\omega_c t + \beta_k(t)), \quad 0 \le k \le M-1$$

with

$$\int s_k^2(t)dt = \frac{1}{2}\int a_k^2(t)dt = E$$

where $a_k(t)$ and $\beta_k(t)$ are lowpass waveforms with respect to ω_c. When $s_k(t)$ is transmitted the received waveform has the form

$$r(t) = a_k(t)\cos(\omega_c t + \beta_k(t) + \theta_k) + n(t)$$

where θ_k is a random phase. If $\theta_k = 0$ with probability 1 then we have the usual coherent reception situation already discussed. We will for this section assume that θ_k is uniformly distributed on the interval $[0, 2\pi]$ and that the receiver does not know the value of θ_k. We can use the representation of bandpass signals and noise in deriving the optimal receiver.

$$r(t) = \mathrm{Re}[u_k(t)e^{j\theta_k + j\omega_c t}] + n(t)$$

where

$$u_k(t) = a_k(t)\cos\beta_k(t) + ja_k(t)\sin\beta_k(t)$$

and $j = \sqrt{-1}$. Assuming the noise is also narrow band we can express the noise as

$$n(t) = n_c(t)\cos\omega_c t - n_s(t)\sin\omega_c t.$$

Then the lowpass representation of the received signal becomes

$$\tilde{r}(t) = u_k(t)e^{j\theta_k} + z(t)$$

where

$$z(t) = n_c(t) + jn_s(t).$$

Now assume that $z(t)$ is a Gaussian process with covariance function $K(s,t)$ which has eigenfunctions $\varphi_l(t)$ and eigenvalues λ_l. Then we can express the received lowpass signal as

$$\begin{aligned}\tilde{r}(t) &= \sum_{l=0}^{\infty}(u_{k,l}e^{j\theta_k} + z_l)\varphi_l(t) \\ &= \sum_{l=0}^{\infty}\tilde{r}_l\varphi_l(t)\end{aligned}$$

where

$$u_{k,l} = \int u_k(t)\varphi_l^*(t)dt$$

$$z_l = \int z(t)\varphi_l^*(t)dt$$

and z_l is a complex Gaussian random variable with mean zero and with

$$\begin{aligned}E[\mathrm{Re}(z_l)^2] &= \lambda_l \\ E[\mathrm{Im}(z_l)^2] &= \lambda_l \\ E[\mathrm{Re}(z_l)\mathrm{Im}(z_l)] &= 0.\end{aligned}$$

We can now calculate the probability density of $\tilde{\mathbf{r}} = (\tilde{r}_1, ..., \tilde{r}_N)$ conditioned on the value of θ_k. Let $\tilde{r}_l = u_{k,l}e^{j\theta_k} + z_l$ then

$$p_k(\tilde{r}_l|\theta_k) = \frac{1}{2\pi\lambda_l}\exp\left\{-\frac{1}{2\lambda_l}|\tilde{r}_l - e^{j\theta_k}u_{k,l}|^2\right\}$$

$$\begin{aligned}p_k(\tilde{\mathbf{r}}|\theta_k) &= \frac{1}{\prod_{l=1}^N 2\pi\lambda_l}\exp\left\{-\frac{1}{2}\sum_{l=1}^N\frac{|\tilde{r}_l - e^{j\theta_k}u_{k,l}|^2}{\lambda_l}\right\} \\ &= \frac{1}{\prod_{l=1}^N 2\pi\lambda_l}\exp\left\{-\frac{1}{2}\sum_{l=1}^N\frac{|\tilde{r}_l|^2 + |u_{k,l}|^2 - \tilde{r}_l e^{-j\theta_k}u_{k,l}^* - \tilde{r}_l^* e^{j\theta_k}u_{k,l}}{\lambda_l}\right\} \\ &= \prod_{l=1}^N(2\pi\lambda_l)^{-1}\exp\left\{-\frac{1}{2}\sum_{l=1}^N\frac{|\tilde{r}_l|^2 + |u_{k,l}|^2 - 2\mathrm{Re}(\tilde{r}_l e^{-j\theta_k}u_{k,l}^*)}{\lambda_l}\right\} \\ &= \prod_{l=1}^N(2\pi\lambda_l)^{-1}\exp\left\{-\frac{1}{2}\left[\sum_{l=1}^N\frac{|\tilde{r}_l|^2 + |u_{k,l}|^2}{\lambda_l}\right] + \sum_{l=1}^N\frac{\mathrm{Re}(\tilde{r}_l u_{k,l}^*)\cos\theta_k - \mathrm{Im}(\tilde{r}_l u_{k,l}^*)\sin\theta_k}{\lambda_l}\right\} \\ &= \prod_{l=1}^N(2\pi\lambda_l)^{-1}\exp\left\{-\frac{1}{2}\left[\sum_{l=1}^N\frac{|\tilde{r}_l|^2 + |u_{k,l}|^2}{\lambda_l}\right] + \mathrm{Re}[\sum_{l=1}^N\frac{\tilde{r}_l u_{k,l}^*}{\lambda_l}]\cos(\theta_k) - \mathrm{Im}[\sum_{l=1}^N\frac{\tilde{r}_l u_{k,l}^*}{\lambda_l}]\sin(\theta_k)\right\} \\ &= \prod_{l=1}^N(2\pi\lambda_l)^{-1}\exp\left\{-\frac{1}{2}\left[\sum_{l=1}^N\frac{|\tilde{r}_l|^2 + |u_{k,l}|^2}{\lambda_l}\right] + \left(\left|\sum_{l=1}^N\frac{(\tilde{r}_l u_{k,l}^*)}{\lambda_l}\right|\cos(\theta_k + \psi)\right)\right\}\end{aligned}$$

where

$$\psi = \tan^{-1}\left[\frac{\mathrm{Im}[\sum_{l=1}^N\frac{\tilde{r}_l u_{k,l}^*}{\lambda_l}]}{\mathrm{Re}[\sum_{l=1}^N\frac{\tilde{r}_l u_{k,l}^*}{\lambda_l}]}\right].$$

The joint density given signal k transmitted is then obtained by averaging with respect to θ_k. The joint density given signal k transmitted is then

$$p_k(\tilde{r}_1, ..., \tilde{r}_N) = \int_{\theta=0}^{2\pi}\frac{1}{2\pi}p_k(\tilde{r}_1, ..., \tilde{r}_N|\theta_k)d\theta_k$$

$$= \int_{\theta=0}^{2\pi} \frac{1}{2\pi} \prod_{l=1}^{N} (2\pi\lambda_l)^{-1} \exp\left\{ -\frac{1}{2}\left[\sum_{l=1}^{N} \frac{|\tilde{r}_l|^2 + |u_{k,l}|^2}{\lambda_l} \right] + \left(\left| \sum_{l=1}^{N} \frac{(\tilde{r}_l u_{k,l}^*)}{\lambda_l} \right| \cos(\theta_k + \psi) \right) \right\} d\theta$$

$$= \prod_{l=1}^{N} (2\pi\lambda_l)^{-1} \exp\left\{ -\frac{1}{2} \sum_{l=1}^{N} \frac{|\tilde{r}_l|^2 + |u_{k,l}|^2}{\lambda_l} \right\} \int_{\theta=0}^{2\pi} \frac{1}{2\pi} \exp\left\{ \left(\left| \sum_{l=1}^{N} \frac{(\tilde{r}_l u_{k,l}^*)}{\lambda_l} \right| \right) \cos\theta \right\} d\theta$$

$$= \prod_{l=1}^{N} (2\pi\lambda_l)^{-1} \exp\left\{ -\frac{1}{2} \sum_{l=1}^{N} \frac{|\tilde{r}_l|^2 + |u_{k,l}|^2}{\lambda_l} \right\} I_0\left(\left| \sum_{l=1}^{N} \frac{(\tilde{r}_l u_{k,l}^*)}{\lambda_l} \right| \right)$$

where

$$I_0(x) \triangleq \frac{1}{2\pi} \int_{\theta=0}^{2\pi} \exp\{x\cos\theta\}\, d\theta$$

is the modified Bessel function of order 0. Now let us calculate the likelihood ratio between hypothesis H_k and the hypothesis that no signal was present.

$$\Lambda_k(N) = \frac{p_k(\tilde{r}_1, ..., \tilde{r}_N)}{p_0(\tilde{r}_1, ..., \tilde{r}_N)} = \frac{\prod_{l=1}^{N} (2\pi\lambda_l)^{-1} \exp\left\{ -\frac{1}{2} \sum_{l=1}^{N} \frac{|\tilde{r}_l|^2 + |u_{k,l}|^2}{\lambda_l} \right\} I_0\left(|\sum_{l=1}^{N} \frac{\tilde{r}_l u_{k,l}^*}{\lambda_l}| \right)}{\prod_{l=1}^{N} (2\pi\lambda_l)^{-1} \exp\{ -\frac{1}{2} \sum_{l=1}^{N} \frac{|\tilde{r}_l|^2}{\lambda_l} \}}$$

$$= \exp\left\{ -\frac{1}{2} \sum_{l=0}^{N} \frac{u_{k,l} u_{k,l}^*}{\lambda_l} \right\} I_0\left(\left| \sum_{l=1}^{N} \frac{\tilde{r}_l u_{k,l}^*}{\lambda_l} \right| \right).$$

Now

$$\lim_{N\to\infty} \sum_{l=1}^{N} \frac{u_{k,l} u_{k,l}^*}{\lambda_l} = \int u_k(t) q_k^*(t) dt$$

where

$$q_k(t) = \lim_{N\to\infty} \sum_{l=1}^{N} \frac{u_{k,l}}{\lambda_l} \varphi_l(t)$$

is the solution of the integral equation

$$u_k(s) = \int K(s,t) q_k(t) dt.$$

Similarly

$$\sum_{l=1}^{N} \frac{\tilde{r}_l u_{k,l}^*}{\lambda_l} = \int \tilde{r}(t) q_k^*(t) dt.$$

Thus the optimal receiver computes the following likelihood ratios

$$\Lambda_{k,0}(\tilde{r}(t)) = \lim_{N\to\infty} (r(t)) = \exp\{ -\frac{1}{2} \int u_k(t) q_k^*(t) dt \} I_0\left(|\int \tilde{r}(t) q_k^*(t) dt| \right)$$

and chooses k for which $\Lambda_{k,0}$ is maximum.

Special Case: White Gaussian Noise

In this case the integral equation is easily solved:

$$q_k(t) = \frac{2}{N_0} u_k(t)$$

so that

$$\Lambda_{k,0}(\tilde{r}(t)) = \exp\{ -\frac{1}{N_0} \int |u_k(t)|^2 dt \} I_0\left(\frac{2}{N_0} |\int \tilde{r}(t) u_k^*(t) dt| \right).$$

For equi-energy signals this reduces to choosing k that maximizes

$$I_0\left(\frac{2}{N_0}|\int \tilde{r}(t)u_k^*(t)dt|\right)$$

and since $I_0(x)$ is an increasing function of x the optimal receiver chooses k to maximize

$$|\int \tilde{r}(t)u_k^*(t)dt|^2 = (\mathrm{Re}\int \tilde{r}(t)u_k^*(t)dt)^2 + (\mathrm{Im}\int \tilde{r}(t)u_k^*(t)dt)^2.$$

Now note that

$$r(t) = \mathrm{Re}\left[\tilde{r}(t)e^{j\omega_c t}\right]$$

and consider the following integral

$$\int r(t)a_k(t)\cos(\omega_c t + \beta_k(t))dt = \int \mathrm{Re}[\tilde{r}(t)e^{j\omega_c t}]\mathrm{Re}[u_k(t)e^{j\omega_c t}]dt.$$

Since (can you show this) for any two complex numbers a and b

$$\mathrm{Re}[a]\mathrm{Re}[b] = \frac{1}{2}\mathrm{Re}[ab^*] + \frac{1}{2}\mathrm{Re}[ab]$$

the above integral becomes

$$\int r(t)a_k(t)\cos(\omega_c t + \beta_k(t))dt = \frac{1}{2}\int \mathrm{Re}(\tilde{r}(t)(u_k^*(t))dt + \frac{1}{2}\int \mathrm{Re}(\tilde{r}(t)(u_k(t)e^{j2\omega_c t})dt.$$

That the second term is zero is due to the fact that both $\tilde{r}$ and u_k are lowpass processes. Thus

$$\int r(t)a_k(t)\cos(\omega_c t + \beta_k(t))dt = \frac{1}{2}\int \mathrm{Re}(\tilde{r}(t)(u_k^*(t))dt.$$

Similarly

$$\int r(t)a_k(t)\sin(\omega_c t + \beta_k(t))dt = \frac{1}{2}\int \mathrm{Im}(\tilde{r}(t)(u_k^*(t))dt.$$

Thus an equivalent form of the optimal receiver computes the following for each k

$$(\int r(t)a_k(t)\cos(\omega_c t + \beta_k(t))dt)^2 + (\int r(t)a_k(t)\sin(\omega_c t + \beta_k(t))dt)^2$$

and decides that signal k was transmitted if k maximizes the above expression.

2. Performance of Binary Signals in AWGN

Consider a binary communication system with noncoherent reception. Assume the two transmitted signals are

$$s_k(t) = a_k(t)\cos(\omega_c t + \beta_k(t)), \quad k = 1,2$$

with

$$\frac{1}{2E}\int s_0(t)s_1(t)dt = \rho_{0,1} = \rho$$

Let H_1 denote the event that signal s_1 is transmitted and H_2 the event that s_2 is transmitted. The received signal differs from the transmitted signal in that there is a random phase term included and because of the noise. If s_1 is transmitted the received signal then is

$$r(t) = a_1(t)\cos(\omega_c t + \beta_1(t) + \theta_1) + n(t)$$

where $n(t)$ is a white Gaussian noise process. If s_2 is transmitted the received signal then is

$$r(t) = a_2(t)\cos(\omega_c t + \beta_2(t) + \theta_2) + n(t).$$

We would like to compute the error probability of the optimal receiver. The optimal receiver processes the received signal by correlating with two signals and then sums the squares. That is the receiver first computes

$$X_{k,c} \triangleq \int r(t)a_k(t)\cos(\omega_c t + \beta_k(t))dt$$

and

$$X_{k,s} \triangleq \int r(t)a_k(t)\sin(\omega_c t + \beta_k(t))dt$$

Then

$$X_k = X_{k,c}^2 + X_{k,s}^2.$$

The receiver decides signal 2 was transmitted if $X_2 \geq X_1$ and otherwise decides s_1 transmitted. The probability of error given signal s_2 is transmitted is then

$$P\{error\ |H_1\} = P\{X_2 \geq X_1|H_1\}$$

To calculate the error probability we need to know the density of X_k. It is easy to see that $X_{k,c}$ and $X_{k,s}$ are a Gaussian random variables with mean

$$E[X_{k,c}|H_m,\theta_m] = \frac{1}{2}\rho_{k,m}\cos\theta_m$$

$$E[X_{k,s}|H_m,\theta_m] = \frac{1}{2}\rho_{k,m}\sin\theta_m$$

and variance

$$\mathrm{Var}[X_{k,c}|H_m,\theta_m] = \frac{1}{4}N_0E$$

where E is the energy of the transmitted signal. The density of X_k given H_m can then be calculated in a straightforward manner as

$$p_m(x_k) = \frac{1}{2\sigma^2}\exp\left\{-\frac{(\mu^2+x_k)}{2\sigma^2}\right\}I_0\left(\frac{\sqrt{x_k}\mu}{\sigma^2}\right), \quad x > 0$$

where

$$\begin{aligned}
\mu &\triangleq \mu_c^2 + \mu_s^2 \\
\mu_c &\triangleq \frac{1}{2}\rho_{k,m}\cos\theta_k \\
\mu_s &\triangleq \frac{1}{2}\rho_{k,m}\sin\theta_k \\
\sigma^2 &\triangleq \frac{1}{4}N_0E
\end{aligned}$$

Involved calculation then yields

$$P\{\text{error}\ |H_1\} = P\{X_2 \geq X_1|H_1\} = Q(a,b) - \frac{1}{2}\exp\{-(a^2+b^2)/2\}I_0(ab)$$

where

$$\begin{aligned}
a &= \sqrt{\frac{E}{2N_0}(1-\sqrt{1-|\rho|^2})} \\
b &= \sqrt{\frac{E}{2N_0}(1+\sqrt{1-|\rho|^2})}
\end{aligned}$$

and

$$Q(a,b) = \int_{b^2/2}^{\infty}\exp\{-(\frac{a^2}{2}+x)\}I_0(\sqrt{2x}a)dx$$

and is called Marcum's Q function.

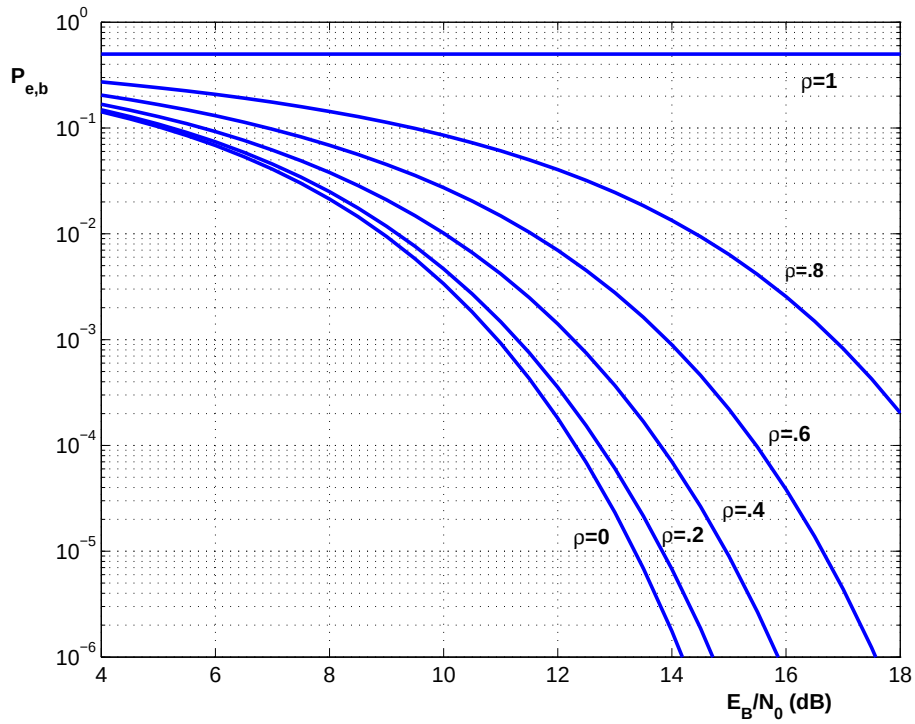

Figure 5.1: Performance of Nonorthogonal Signals with Noncoherent Demodulation

3. Error Probability for M-orthogonal Signals in AWGN

In this section we derive the error probability for M-ary orthogonal signal in additive white Gaussian noise. The transmitted signal is one of M signals, $s_0(t), ..., s_{M-1}(t)$ where

$$s_i(t) = \sqrt{2P}a_j(t)\cos(2\pi f_c t), \quad 0 \le t \le T,$$

where

$$\int_0^T a_j(t)a_i(t)dt = \begin{cases} 0 & i \neq j \\ T & i = j. \end{cases}$$

The optimal receiver computes

$$\begin{aligned} X_{c,j} &= \int_0^T r(t)\sqrt{\frac{2}{T}}a_j(t)\cos(2\pi f_c t)dt \\ X_{s,j} &= \int_0^T r(t)\sqrt{2T}a_j(t)\sin(2\pi f_c t)dt \end{aligned}$$

for $j = 0, 1, ..., M-1$. These are further processed by computing $Y_j = X_{c,j}^2 + X_{s,j}^2$.

The statistics for the receiver output (assuming signal $s_i(t)$ is transmitted are

$$\begin{aligned} X_{jc} &= \sqrt{E}\ \delta_{ij}\cos\phi_i + n_c \sim N\left(\sqrt{E}\delta_{ij}\cos\phi_i, \frac{N_0}{2}\right) \\ X_{js} &= \sqrt{E}\ \delta_{ij}\sin\phi_i + n, \sim N\left(\sqrt{E}\delta_{ij}\sin\phi_i, \frac{N_0}{2}\right) \\ j &= 0, 2, \ldots, M-1. \end{aligned}$$

Let $Y_j = X_{jc}^2 + X_{js}^2$. Then we need to determine the probability that Y_0 which corresponds to nonzero mean random variables is less than $Y_1, Y_2, ..., Y_{M-1}$ which correspond to zero mean random variables.

$$\begin{aligned}
P_{c,i} &= P\{Y_j \le Y_i, j \ne i \mid s_i \text{ transmitted}\} \\
&= E[P\{Y_j < Y_i, j \ne i \mid Y_i, s_i \text{ trans}\}] \\
&= E[\prod_{j \ne i} P\{Y_j < Y_i \mid s_i \text{ trans}, Y_i\}] \\
&= \int f_s(y_i)[P\{Y_j \le y_i | s_i \text{transmitted}\}]^{M-1}\, dy_i \\
&= \int f_s(y_i)[F_n(y_i)]^{(M-1)} dy_i.
\end{aligned}$$

where $F_s(y)$ is the distribution function of Y_j given signal $s_j(t)$ was transmitted and $F_n(y)$ ($f_n(y)$) is the distribution (density) function of Y_i given signal $s_j(t)$ was transmitted with $i \ne j$. Doing an integration by parts we find

$$P_{c,i} = (M-1)\int_0^\infty F_s(y)[F_n(y)]^{(M-2)} f_n(y) dy$$

Thus from the appendix we find that the error probability is given as

$$P_{c,i} = (M-1)\int_0^\infty [1 - Q(\sqrt{\frac{2E}{N_0}}, \sqrt{2y})][1 - e^{-y}]^{(M-2)} e^{-y} dy.$$

This expression is not too difficult to evaluate for most values of M. For small values of M and alternative (and better known) expression can be derived as follows.

Define $Z_j = \sqrt{X_{jc}^2 + X_{js}^2}$. Then

$$\begin{aligned}
P_{c,i} &= P\{Z_j \le Z_i, j \ne i \mid s_i \text{ transmitted}\} \\
&= E[P\{Z_j < Z_i, j \ne i \mid Z_i, s_i \text{ trans}\}] \\
&= E[\prod_{j \ne i} P\{Z_j < Z_i \mid s_i \text{ trans}, Z_i\}] \\
&= \int p(z_i)[P\{Z_j \le z_i\}]^{M-1}\, dz_i
\end{aligned}$$

Doing a change of variables ($\nu = \frac{u^2}{2\sigma^2}$, $d\nu = \frac{u du}{\sigma^2}$) we obtain

$$\begin{aligned}
P\{Z_j \le z_i\} &= \int_{u \le z_i} \frac{u}{\sigma^2}\, e^{-u^2/2\sigma^2} du = \int_{\nu \le z_i^2/2\sigma^2} e^{-\nu} d\nu \\
&= 1 - e^{-z_i^2/2\sigma^2} \\
P_{c,i} &= \int_0^\infty p(z_i)[1 - e^{-z_i^2/2\sigma^2}]^{M-1}\, dz_i \\
&= \int_0^\infty p(z_i) \left(\sum_{l=0}^{M-1} (-1)^l \binom{M-1}{l} e^{-l z_i^2/2\sigma^2} \right) dz_i \\
&= \sum_{l=0}^{M-1} (-1)^l \binom{M-1}{l} \int_0^\infty p(z_i) e^{-l z_i^2/2\sigma^2} dz_i
\end{aligned}$$

$$\begin{aligned}
\int_0^\infty p(z_i) e^{-l z_i^2/2\sigma^2} dz_i &= \int_0^\infty \frac{z_i}{\sigma^2}\, e^{\frac{-(z_i^2+\mu^2)}{2\sigma^2}}\, I_0\left(\frac{\mu z_i}{\sigma^2}\right) e^{-l z_i^2/2\sigma^2} dz_i \\
&= e^{-\mu^2/2\sigma^2} \int_0^\infty \frac{z_i}{\sigma^2}\, e^{-(l+1) z_i^2/2\sigma^2}\, I_0\left(\frac{\mu z_i}{\sigma^2}\right) dz_i
\end{aligned}$$

Do another change of variables, ($w_i = \sqrt{l+1}\, z_i$, $dw_i = \sqrt{l+1}\, dz_i$) we get

$$\begin{aligned}
\int_0^\infty p(z_i) e^{-lz_i^2/2\sigma^2} dz_i &= e^{-\mu^2/2\sigma^2} \int_0^\infty \frac{w_i}{\sigma^2\sqrt{l+1}} e^{-w_i^2/(2\sigma^2)} I_0\left(\frac{\mu w_i}{\sqrt{l+1}\,\sigma^2}\right) \frac{dw_i}{\sqrt{l+1}} \\
&= e^{-\mu^2/2\sigma^2} \frac{1}{(l+1)} \int \frac{w_i}{\sigma^2}\, e^{-\frac{w_i^2}{2\sigma^2}} I_0\left(\frac{\mu w_i}{\sqrt{l+1}\,\sigma^2}\right) dw_i
\end{aligned}$$

Let $\hat{\mu} = \frac{\mu}{\sqrt{l+1}}$. Then

$$\begin{aligned}
\int_0^\infty p(z_i) e^{-lz_i^2/2\sigma^2} dz_i &= \frac{e^{-\mu^2/2\sigma^2} e^{\hat{\mu}^2/2\sigma^2}}{l+1} \underbrace{\int \frac{w_i}{\sigma^2}\, e^{-\left(\frac{w_i^2+\hat{\mu}^2}{2\sigma^2}\right)} I_0\left(\frac{\hat{\mu} w_i}{\sigma^2}\right) dw_i}_{=1} \\
&= \frac{\exp\left\{\frac{\hat{\mu}^2-\mu^2}{2\sigma^2}\right\}}{(l+1)} = \frac{\exp\left\{\frac{\frac{\mu^2}{l+1}-\mu^2}{2\sigma^2}\right\}}{l+1} \\
&= \exp\left\{-\frac{l\mu^2}{2(l+1)\sigma^2}\right\} \frac{1}{l+1}.
\end{aligned}$$

Substituting this into the expression for the probability of correct, we obtain

$$P_{c,i} = \sum_{l=0}^{M-1} (-1)^l \binom{M-1}{l} \frac{\exp\left\{\frac{-l\mu^2}{2(l+1)\sigma^2}\right\}}{(l+1)}$$

where

$$\frac{\mu^2}{2\sigma^2} = \frac{E^2}{2\frac{N_0 E}{2}} = \frac{E}{N_0}.$$

Thus

$$\begin{aligned}
P_{c,i} &= 1 + \sum_{l=1}^{M-1} \frac{(-1)^l \binom{M-1}{l}}{l+1} \exp\left\{-\frac{l}{(l+1)} \frac{E}{N_0}\right\} \\
P_{e,i} &= 1 - P_{c,i} = \sum_{l=1}^{M-1} \frac{(-1)^{l+1} \binom{M-1}{l}}{l+1} \exp\left\{-\frac{l}{l+1} \frac{E}{N_0}\right\} \\
&= 1 - P_{c,i} = \sum_{l=1}^{M-1} \frac{(-1)^{l+1} \binom{M-1}{l}}{l+1} \exp\left\{-\frac{l}{l+1} \frac{E_b \log_2(M)}{N_0}\right\}
\end{aligned}$$

$$P_e = \frac{1}{M} \sum_{i=2}^{M} P_{e,i} = P_{e,i}$$

We can also determine the bit error probability from the symbol error probability. If $M = 2^k$ then for each symbol transmitted k bits of information are being transmitted. Because of the symmetry

$$P_{e,b} = \frac{1}{2} \frac{M}{M-1} P_{e,i}$$

For $M = 2$ the error probability takes a particularly simple form, namely

$$P_{e,b} = P_{e,i} = \frac{1}{2}\, e^{-E_b/2N_0}, M = 2.$$

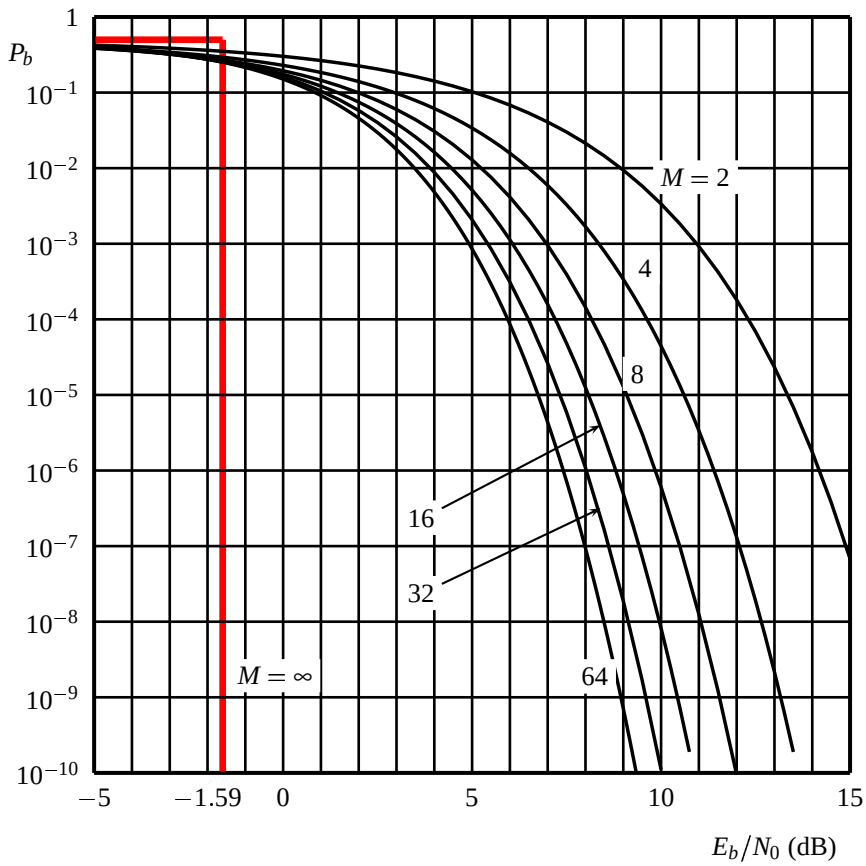

Figure 5.2: Bit error probability for M-ary orthogonal signal with noncoherent detection

The limiting behavior of the error probability for M-ary orthogonal signals for M large with noncoherent demodulation is the same as the limiting performance of coherent demodulation.

$$\lim_{M\to\infty} P_e(M) = \begin{cases} 1, & E_b/N_0 < \ln(2) = -1.59dB \\ 0, & E_b/N_0 > \ln(2) = -1.59dB \end{cases}$$

$$\lim_{M\to\infty} P_{e,b}(M) = \begin{cases} 1/2, & E_b/N_0 < \ln(2) = -1.59dB \\ 0, & E_b/N_0 > \ln(2) = -1.59dB \end{cases}$$

4. Error Estimates for Repetition Codes with Noncoherent Reception

Consider transmitting one of two codewords of length L using binary frequency shift keying (orthogonal) and noncoherent reception. The optimum receiver would compute the log-likelihood ratio and compare to zero (for equally likely codewords) to determine which of the two codewords was transmitted. Assume that the first codeword is the all zero vector (0,0,...,0) of length L and the other codeword is the all one vector (1,1,...,1) of length L. If the two codewords agreed in some positions then we would not need to process the received signal over the interval of time where they agreed since no information can be gained about which signal was transmitted from the received signal in that interval.

The transmitted signal would be

$$s_0(t) = \sum_{l=0}^{L-1} \sqrt{2P}\cos(\omega_0 t + \theta_{0,l}) p_T(t - lT)$$

or

$$s_1(t) = \sum_{l=0}^{L-1} \sqrt{2P}\cos(\omega_1 t + \theta_{1,l}) p_T(t - lT)$$

where $\theta_{i,l}$ are independent identically distributed random variables with uniform distribution unknown to the receiver. The received signal is

$$r(t) = \begin{cases} s_0(t) + n(t) & H_0 \text{ true} \\ s_1(t) + n(t) & H_1 \text{ true} \end{cases}$$

The receiver processes the signals using noncoherent matched filters; that is the received signal is multiplied by $\exp j\omega_0 t$ then passed through a filter with impulse response $p_T(t)$, sampled and then the magnitude is formed. Denote by $Y_{0,l}$ the output of the noncoherent matched filter

$$Y_{0,l} = |\int_{-\infty}^{\infty} r(s) p_T(s - lT) \exp\{j\omega_0(s - lT)\} ds|^2$$

and

$$Y_{1,l} = |\int_{-\infty}^{\infty} r(s) p_T(s - lT) \exp\{j\omega_1(s - lT)\} ds|^2$$

The statistics of $Y_{0,l}, Y_{1,l}$ were calculated in the previous section. Because of orthogonality of the received signals and that the noise is white the joint statistics of $\mathbf{Y} = (Y_{0,1}, ..., Y_{0,L}, Y_{1,1}, ..., Y_{1,L})$ factor (conditioned on either of the two hypotheses) as

$$p(y_{0,1}, ..., y_{0,L}, y_{1,1}, ..., y_{1,L}, |H_k) = \prod_{l=1}^{L} p(y_{0,l}|H_k) p(y_{1,l}|H_k) \quad k = 0, 1.$$

The log-likelihood ratio is then

$$\begin{aligned} \Lambda = \log \frac{p(\mathbf{y}|H_1)}{p(\mathbf{y}|H_0)} &= \log \prod_{l=1}^{L} \frac{p(y_{0,l}|H_1) p(y_{1,l}|H_1)}{p(y_{0,l}|H_0) p(y_{1,l}|H_0)} \\ &= \sum_{l=1}^{L} \log \frac{p(y_{0,l}|H_1) p(y_{1,l}|H_1)}{p(y_{0,l}|H_0) p(y_{1,l}|H_0)} \\ &= \sum_{l=1}^{L} \log\{p(y_{0,l}|H_1) p(y_{1,l}|H_1)\} - \log\{p(y_{0,l}|H_0) p(y_{1,l}|H_0)\} \end{aligned}$$

Substituting in the appropriate density functions yields

$$\Lambda = \sum_{l=1}^{L} \log[I_0(\frac{\mu\sqrt{y_{1,l}}}{\sigma^2})] - \log[I_0(\frac{\mu\sqrt{y_{0,l}}}{\sigma^2})]$$

The optimum receiver is thus

$$\sum_{l=1}^{L} \log[I_0(\frac{\mu\sqrt{y_{1,l}}}{\sigma^2})] \underset{H_0}{\overset{H_1}{\gtrless}} \sum_{l=1}^{L} \log[I_0(\frac{\mu\sqrt{y_{0,l}}}{\sigma^2})]$$

which is quite complex in implementation. It would be useful to have suboptimum receivers which are easier to implement but have nearly optimum performance. Before we suggest some suboptimal receivers is would be

useful to get estimates of the performance of the optimum receiver. The error probability (given H_0 say) is easy to write down but hard to evaluate except for L small. It is

$$P_e = \int_{\mathbf{y}} I[R_1] p(\mathbf{y}|H_0) d\mathbf{y}$$

where $I[R_1]$ is the region where the log-likelihood ratio is positive. This is a $2L$ dimensional integral. The Chernoff bound to the error probability can be expressed as

$$P_e \leq D^L$$

where

$$D = \int_{\mathbf{y}} \sqrt{p(\mathbf{y}|H_0) p(\mathbf{y}|H_1)} d\mathbf{y}.$$

For the additive white Gaussian channel

$$\begin{aligned} D &= \left[\int_0^\infty \frac{1}{2\sigma^2} \exp\{-\frac{1}{2}(\frac{y}{\sigma^2} + \frac{\mu^2}{\sigma^2})\} \sqrt{I_0(\frac{\mu\sqrt{y}}{\sigma^2})} dy \right]^2 \\ &= \left[\int_0^\infty \exp\{-(w + \Gamma/2)\} \sqrt{I_0(\sqrt{4\Gamma w})} dw \right]^2 \end{aligned}$$

and $\Gamma = E/N_0$. This is much more computationally attractive than the exact expression. An asymptotic form for low signal-to-noise ratios is not to difficult to compute.

$$D \approx 1 - \left(\frac{\Gamma}{2}\right)^2 \qquad \Gamma \text{ small.}$$

For hard decisions

$$D = 2\sqrt{p(1-p)}, \qquad p = \frac{1}{2} e^{-\frac{\Gamma}{2}}$$

which for low signal-to-noise ratios becomes

$$D \approx 1 - \left(\frac{\Gamma}{2\sqrt{2}}\right)^2 \qquad \Gamma \text{ small.}$$

Thus for low signal-to-noise ratios hard decisions cost $\sqrt{2}$=1.5dB.

Now let us consider some suboptimal receivers. First note that $\mu/\sigma^2 = 2/N_0$. So the argument to the Bessel function will be small if the noise power is large (low signal-to-noise ratio) and will be large if the noise power is small (high signal-to-noise ratio). Also note that (see Abramowitz and Stegun *Handbook of Mathematical Functions*)

$$\begin{aligned} I_0(x) &\approx 1 + \frac{x^2}{4}, \quad x \text{ small} \\ \log I_0(x) &\approx \frac{x^2}{4}, \quad x \text{ small} \\ I_0(x) &\approx \frac{e^x}{\sqrt{2\pi x}}, \quad x \text{ large} \end{aligned}$$

Using the approximation for $\log I_0$ in the optimum decision rule we get

$$\sum_{l=1}^{L} (\frac{\mu^2 y_{1,l}}{4\sigma^4}) \underset{H_0}{\overset{H_1}{\gtrless}} \sum_{l=1}^{L} (\frac{\mu^2 y_{0,l}}{4\sigma^4})$$

$$\sum_{l=1}^{L} y_{1,l} \underset{H_0}{\overset{H_1}{\gtrless}} \sum_{l=1}^{L} y_{0,l}$$

So for small signal-to-noise ratios the optimum receiver is the square-law combining receiver.

Now consider when the argument to the Bessel function is large. The optimum decision rule then becomes

$$\sum_{l=1}^{L}(\frac{\mu\sqrt{y_{1,l}}}{2\sigma^2}) - \log\sqrt{2\pi\mu\sqrt{y_{1,l}}/\sigma^2} - (\frac{\mu\sqrt{y_{0,l}}}{2\sigma^2}) + \log\sqrt{2\pi\mu\sqrt{y_{0,l}}/\sigma^2} \underset{H_0}{\overset{H_1}{\gtrless}} 0$$

Let $w_{i,l} = y_{i,l}/(2\sigma^2)$ then the decision rule is

$$\sum_{l=1}^{L}(\sqrt{4\Gamma w_{1,l}}) - \log\sqrt{2\pi\sqrt{4\Gamma w_{1,l}}} - (\sqrt{4\Gamma w_{0,l}}) + \log\sqrt{2\pi\sqrt{4\Gamma w_{0,l}}} \underset{H_0}{\overset{H_1}{\gtrless}} 0$$

Note that the average value of W given signal present is $\Gamma + 1$ while the average value of W given no signal is 1. For very large Γ the terms $(\sqrt{4\Gamma w})$ dominates the terms of the form $\log\sqrt{2\pi\sqrt{4\Gamma w}}$ and thus the optimum decision rule is

$$\sum_{l=1}^{L}(\sqrt{w_{1,l}}) \underset{H_0}{\overset{H_1}{\gtrless}} \sum_{l=1}^{L}(\sqrt{w_{0,l}})$$

Thus the decision rule for very high signal-to-noise ratio is to add the square-roots of the noncoherent matched filter outputs.

It is of interest to analyze the performance of these suboptimal receivers. The receiver for very low signal-to-noise ratios is (relatively) easy to analyze. First let us normalize the density for the sum of the squares of $2L$ random variables. Let

$$W_0 = \frac{1}{2\sigma^2}\sum_{l=1}^{L} X_{c,0,l}^2 + X_{s,0,l}^2$$

and similarly for W_1. Then the density of W is given by

$$\begin{aligned} f_{W_0}(w_0|H_0) &= \left(\frac{w_0}{\Gamma}\right)^{(L-1)/2}\exp\{-(w_0+\Gamma)\}I_{L-1}(\sqrt{4w_0\Gamma}) \quad w \geq 0 \\ f_{W_0}(w_0|H_1) &= \frac{w_0^{(L-1)}}{(L-1)!}\exp\{-w_0\} \quad w \geq 0 \end{aligned}$$

and similarly for W_1.

$$\begin{aligned} P_e &= 1 - P\{W_0 > W_1|H_0\} \\ &= 1 - \int_0^\infty f_{W_0}(w_0|H_0)P\{W_1 < w_0|H_0\}dw_0 \\ &= 1 - \int_0^\infty f_{W_0}(w_0|H_0)[1 - \sum_{m=0}^{L-1}\frac{w_0^m}{m!}e^{-w_0}]dw_0 \\ P_e &= \frac{1}{2}\exp\{-\frac{\Gamma}{2}\}\sum_{i=0}^{L-1}\frac{(\Gamma/2)^i}{i!(L+i-1)!}\sum_{j=i}^{L-1}\frac{(j+L-1)!}{(j-i)!2^{j+L-1}} \end{aligned}$$

For $L = 1$ the above becomes

$$P_e = \frac{1}{2}e^{-\Gamma/2}$$

where $\Gamma = E/N_0$. The Chernoff bound can also be calculated for square-law combining.

5. Primer on sums of squares of Gaussian random variables

First we derive the density for the sum of the squares of two Gaussian random variables. Let

$$\begin{aligned} X_c &\sim N(\mu_c, \sigma^2) \\ X_s &\sim N(\mu_s, \sigma^2) \end{aligned}$$

with X_c, X_s independent. Let $\mu^2 = \mu_c^2 + \mu_s^2$ and

$$Y = X_c^2 + X_s^2.$$

Then

$$\begin{aligned}
P\{Y \le y\} &= \iint\limits_{x_c^2+x_s^2 \le y} \frac{1}{2\pi\sigma^2} \exp\left\{-\frac{1}{2\sigma^2}\left[(x_c-\mu_c)^2 + (x_s-\mu_s)^2\right]\right\} dx_c dx_s \\
&= \iint\limits_{x_c^2+x_s^2 \le y} \frac{1}{2\pi\sigma^2} \exp\left\{-\frac{1}{2\sigma^2}[x_c^2 + x_s^2 - 2(x_c\mu_c + x_s\mu_s) + \mu^2]\right\} dx_c dx_s \\
&= \iint\limits_{x_c^2+x_s^2 \le y} \frac{1}{2\pi\sigma^2} \exp\left\{-\frac{1}{2\sigma^2}\left[x_c^2 + x_s^2 - 2\mu\sqrt{x_c^2+x_s^2}\right.\right. \\
&\qquad\qquad \left.\left.\cos(\phi+\gamma) + \mu^2\right]\right\} dx_c dx_s
\end{aligned}$$

where $\phi = \tan^{-1}\frac{x_s}{x_c}$ and $\gamma = \tan^{-1}\left(\frac{-\mu_s}{\mu_c}\right)$.

$$\begin{aligned}
&= \int_{r^2 \le \sqrt{y}} \int_{\phi=0}^{2\pi} \frac{r}{2\pi\sigma^2} \exp\left\{-[\frac{r^2}{2\sigma^2} - \frac{\mu r}{\sigma^2}\cos(\phi+\gamma) + \frac{\mu^2}{2\sigma^2}]\right\} dr d\phi \\
&= \int_{r \le \sqrt{y}} \frac{r}{\sigma^2} \exp\left\{\frac{-r^2}{2\sigma^2}\right\} e^{-\mu^2/2\sigma^2} \underbrace{\frac{1}{2\pi}\int_{\phi=0}^{2\pi} \exp\left\{\frac{\mu r}{\sigma^2}\cos(\phi+\gamma)\right\} d\phi}_{I_0\left(\frac{\mu r}{\sigma^2}\right)} dr
\end{aligned}$$

$$\begin{aligned}
x_c\mu_c + x_s\mu_s &= \beta\cos(\phi+\gamma) \\
&= \beta\,[\cos\phi\cos\gamma - \sin\phi\sin\gamma]
\end{aligned}$$

$$\phi = \tan^{-1}\frac{x_s}{x_c} \qquad \begin{aligned} \tan\phi &= \frac{x_s}{x_c} \\ \cos\phi &= \frac{x_c}{\sqrt{x_c^2+x_s^2}} \\ \sin\phi &= \frac{x_s}{\sqrt{x_0^2+x_s^2}} \end{aligned}$$

$$\cos\gamma = \frac{\mu_c}{\sqrt{\mu_c^2+\mu_s^2}} \quad \sin\gamma = \frac{-\mu_s}{\sqrt{\mu_c^2+\mu_s^2}}$$

$$\begin{aligned}
\beta &= \sqrt{\mu_c^2+\mu_s^2}\,\sqrt{x_c^2+x_s^2} \\
x_c\mu_c + x_s\mu_s &= \sqrt{\mu_c^2+\mu_s^2}\,\sqrt{x_c^2+x_s^2}\,[\cos(\phi+\gamma)]
\end{aligned}$$

$$\phi = \tan^{-1}\left(\frac{x_s}{x_c}\right)$$

$$\gamma = \tan^{-1}\left(\frac{-\mu_s}{\mu_c}\right)$$

$$P\{Y \le y\} = \int_{r<\sqrt{y}} \frac{r}{\sigma^2} \exp\left\{-\frac{r^2+\mu^2}{2\sigma^2}\right\} I_0\left(\frac{\mu r}{\sigma^2}\right) dr$$

Let $u = r^2$ then $0 \le r \le \sqrt{y}$ is equivalent to $u \le y$. Also $du = 2rdr$.

$$\begin{aligned}
P\{Y \le y\} &= \int_{u \le y} \frac{1}{2\sigma^2} \exp\left\{-\frac{u+\mu^2}{2\sigma^2}\right\} I_0\left(\frac{\mu\sqrt{u}}{\sigma^2}\right) du \\
f_Y(y) &= \frac{1}{2\sigma^2} \exp\left\{-\frac{y+\mu^2}{2\sigma^2}\right\} I_0\left(\frac{\mu\sqrt{y}}{\sigma^2}\right)
\end{aligned}$$

A change of variables makes for a cleaner expression: Let $W = Y/(2\sigma^2)$. Then $f_W(w) = 2\sigma^2 f_Y(2\sigma^2 w)$

$$f_W(w) = \exp\{-(w+\Gamma)\} I_0\left(\sqrt{4\Gamma w}\right)$$

where $\Gamma = \mu^2/(2\sigma^2)$. (If the receiver does this normalization then it must know the power density of the noise). Now let $Z = \sqrt{Y}$. Then

$$\begin{aligned}
P\{Z \le z\} &= P\left\{\sqrt{Y} \le z\right\} = P\left\{Y \le z^2\right\} \\
F_Z(z) &= F_Y(z^2) \\
f_Z(z) &= f_Y(z^2)(2z) \\
&= \frac{z}{\sigma^2} \exp\left\{-\frac{z^2+\mu^2}{2\sigma^2}\right\} I_0\left(\frac{\mu z}{\sigma^2}\right) \\
\mu = 0 \quad &\Rightarrow \quad f_Y(y) = \frac{1}{2\sigma^2} e^{-y/2\sigma^2} \\
& \qquad f_Z(z) = \frac{z}{\sigma^2} e^{-z^2/2\sigma^2}
\end{aligned}$$

Using the fact that a density must integrate to one we can derive an useful integral.

$$\int_0^\infty \frac{r}{\sigma^2} \exp\{-r^2/2\sigma^2\} \exp\{-\alpha r^2\} I_0(r\beta) dr = \frac{1}{1+2\sigma^2\alpha} \exp\{\frac{\sigma^2\beta^2}{1+2\sigma^2\alpha}\}$$

Generalization:

$$\begin{aligned}
X_{c,i} &\sim N(\mu_{c,i}, \sigma^2) \qquad i = 1,2,\ldots,L \\
X_{s,i} &\sim N(\mu_{s,i}, \sigma^2) \qquad i = 1,2,\ldots,L
\end{aligned}$$

with $X_{c,i}, X_{s,i}$ independent. Let $\Lambda = \sum_{i=1}^L \mu_{c,i}^2 + \mu_{s,i}^2$ and

$$Y = \sum_{i=1}^L X_{c,i}^2 + X_{s,i}^2.$$

Then

$$f_Y(y) = \frac{1}{2\sigma^2} \exp\{-\left(\frac{y+\Lambda}{2\sigma^2}\right)\} \left(\frac{y}{\Lambda}\right)^{(L-1)/2} I_{L-1}(\frac{\sqrt{y\Lambda}}{\sigma^2})$$

$$F_Y(y) = 1 - Q_L\left(\frac{\sqrt{\Lambda}}{\sigma}, \frac{\sqrt{y}}{\sigma}\right)$$

where

$$Q_L(a,b) = Q(a,b) + \exp\{(a^2+b^2)/2\} \sum_{k=1}^{L-1} (\frac{b}{a})^k I_k(ab)$$

and

$$Q(a,b) = \exp\{-(a^2+b^2)/2\} \sum_{k=1}^{\infty} (\frac{b}{a})^k I_k(ab)$$

For $\Lambda = 0$

$$\begin{aligned}
f_Y(y) &= \frac{1}{2\sigma^2} \exp\{-\left(\frac{y}{2\sigma^2}\right)\} \left(\frac{y}{2\sigma^2}\right)^{(L-1)} \frac{1}{(L-1)!} \\
F_Y(y) &= 1 - \exp\{-\left(\frac{y}{2\sigma^2}\right)\} \sum_{k=0}^{L-1} \frac{1}{k!} \left(\frac{y}{2\sigma^2}\right)^k
\end{aligned}$$

Let $Z = \sqrt{Y}$ then

$$\begin{aligned} f_Z(z) &= \frac{z^L}{\sigma^2 \Lambda^{(L-1)/2}} \exp\{-\left(\frac{z^2+\Lambda}{2\sigma^2}\right)\} I_{L-1}(\frac{z\sqrt{\Lambda}}{\sigma^2}) \\ F_Z(z) &= 1 - Q_L\left(\frac{\sqrt{\Lambda}}{\sigma}, \frac{z}{\sigma}\right) \end{aligned}$$

For $\Lambda = 0$ we obtain

$$\begin{aligned} f_Z(z) &= \frac{z^{2L-1}}{2^{L-1}\sigma^{2L}(L-1)!} \exp\{-\frac{z^2}{2\sigma^2}\} \\ F_Z(z) &= 1 - \exp\{-\frac{z^2}{2\sigma^2}\} \sum_{l=0}^{L-1} \frac{(z^2/(2\sigma^2))^l}{l!} \end{aligned}$$

Consider two random variables Z_1 and Z_2 where Z_1 has distribution given above with $\Lambda_1 = 0$ and with different variances σ_1 and σ_2. Assume that they are independent. We wish to determine the probability that $Z_1 > Z_2$.

$$\begin{aligned} P\{Z_1 < Z_2\} &= \int_{z_2=0}^{\infty} P\{Z_1 \le z_2\} f_{Z_2}(z_2) dz_2 \\ &= \int_{z_2=0}^{\infty} F_{Z_1}(z_2) f_{Z_2}(z_2) dz_2 \\ &= \int_{z_2=0}^{\infty} \left[1 - \exp\{-\frac{z_2^2}{2\sigma_1^2}\} \sum_{l=0}^{L-1} \frac{(z_2^2/(2\sigma_1^2))^l}{l!}\right] f_{Z_2}(z_2) dz_2 \\ &= \int_{z_2=0}^{\infty} \left[1 - \exp\{-\frac{z_2^2}{2\sigma_1^2}\} \sum_{l=0}^{L-1} \frac{(z_2^2/(2\sigma_1^2))^l}{l!}\right] \\ &\qquad \frac{z_2^L}{\sigma_2^2 \Lambda^{(L-1)/2}} \exp\{-\frac{z_2^2+\Lambda}{2\sigma_2^2}\} I_{L-1}(\frac{z_2\sqrt{\Lambda}}{\sigma_2^2}) dz_2 \\ &= 1 - \sum_{l=0}^{L-1} \frac{1}{(2\sigma_1^2)^l l!} \exp\{-\left(\frac{\Lambda}{2\sigma_2^2}\right)\} \int_{z=0}^{\infty} \exp\{-\frac{z^2}{2\sigma_1^2} - \frac{z^2}{2\sigma_2^2}\} \\ &\qquad \frac{z^{L+2l}}{\sigma_2^2 \Lambda^{(L-1)/2}} I_{L-1}(\frac{z\sqrt{\Lambda}}{\sigma_2^2}) dz \\ &= 1 - \sum_{l=0}^{L-1} \frac{1}{(2\sigma_1^2)^l l! \sigma_2^2 \Lambda^{(L-1)/2}} \exp\{-\left(\frac{\Lambda}{2\sigma_2^2}\right)\} \int_{z=0}^{\infty} e^{-\alpha^2 z^2} z^{L+2l} I_{L-1}(\gamma z) dz \end{aligned}$$

where

$$\begin{aligned} \alpha^2 &= \frac{1}{2\sigma_1^2} + \frac{1}{2\sigma_2^2} \\ \gamma &= \sqrt{\Lambda}/\sigma_2^2 \end{aligned}$$

The integral may be evaluated as (see Lindsey, Watson)

$$\int_{z=0}^{\infty} e^{-\alpha^2 z^2} z^{L+2l} I_{L-1}(\gamma z) dz = \frac{l! \gamma^{L-1}}{2^L \alpha^{2(L+l)}} e^{\gamma^2/(4\alpha^2)} \sum_{k=0}^{l} \binom{l+L-1}{l-k} \frac{[\gamma^2/(4\alpha^2)]^k}{k!}$$

Thus

$$P\{Z_1 > Z_2\} = \sum_{l=0}^{L-1} \frac{1}{(2\sigma_1^2)^l l! \sigma_2^2 \Lambda^{(L-1)/2}} \exp\{-\left(\frac{\Lambda}{2\sigma_2^2}\right)\} \frac{l! \gamma^{L-1}}{2^L \alpha^{2(L+l)}} e^{\gamma^2/(4\alpha^2)}$$

$$
\begin{aligned}
& \sum_{k=0}^{l} \binom{l+L-1}{l-k} \frac{[\gamma^2/(4\alpha^2)]^k}{k!} \\
= & \sum_{l=0}^{L-1} \frac{1}{(2\sigma_1^2)^l \sigma_2^2 \Lambda^{(L-1)/2}} \exp\{-\left(\frac{\Lambda}{2\sigma_2^2}\right)\} \frac{l!\gamma^{L-1}}{2^L \alpha^{2(L+l)}} e^{\gamma^2/(4\alpha^2)} \\
& \sum_{k=0}^{l} \binom{l+L-1}{l-k} \frac{[\gamma^2/(4\alpha^2)]^k}{k!} \\
= & \sum_{l=0}^{L-1} \frac{1}{(2\sigma_1^2)^l \sigma_2^2 \Lambda^{(L-1)/2}} \exp\{\gamma^2/(4\alpha^2) - \frac{\Lambda}{2\sigma_2^2}\} \frac{\gamma^{L-1}}{2^L \alpha^{2(L+l)}} \\
& \sum_{k=0}^{l} \binom{l+L-1}{l-k} \frac{[\gamma^2/(4\alpha^2)]^k}{k!}
\end{aligned}
$$

$$
\begin{aligned}
\alpha^2 &= \frac{\sigma_1^2+\sigma_2^2}{2\sigma_1^2\sigma_2^2} \\
\gamma^2/(4\alpha^2) &= \frac{(\Lambda/\sigma_2^4)2\sigma_1^2\sigma_2^2}{\sigma_1^2+\sigma_2^2} \\
&= \frac{\Lambda\sigma_1^2}{2\sigma_2^2(\sigma_1^2+\sigma_2^2)} \\
\gamma^2/(4\alpha^2) - \frac{\Lambda}{2\sigma_2^2} &= \frac{(\Lambda/\sigma_2^4)2\sigma_1^2\sigma_2^2}{\sigma_1^2+\sigma_2^2} - \frac{\Lambda}{2\sigma_2^2} \\
&= \frac{\Lambda}{2\sigma_2^2}\left[\frac{\sigma_1^2}{\sigma_1^2+\sigma_2^2} - 1\right] \\
&= \frac{\Lambda}{2(\sigma_1^2+\sigma_2^2)}
\end{aligned}
$$

$$
\begin{aligned}
P\{Z_1 > Z_2\} &= \exp\{-\frac{\Lambda}{2(\sigma_1^2+\sigma_2^2)}\} \sum_{l=0}^{L-1} \frac{1}{(2\sigma_1^2)^l \sigma_2^2 \Lambda^{(L-1)/2}} \frac{\gamma^{L-1}}{2^L \alpha^{2(L+l)}} \\
& \sum_{k=0}^{l} \binom{l+L-1}{l-k} \frac{[\gamma^2/(4\alpha^2)]^k}{k!} \\
&= e^{-\frac{\Lambda}{2(\sigma_1^2+\sigma_2^2)}} \left[\frac{\sigma_1^2}{\sigma_1^2+\sigma_2^2}\right]^L \sum_{l=0}^{L-1} \left[\frac{\sigma_2^2}{\sigma_1^2+\sigma_2^2}\right]^l \sum_{k=0}^{l} \binom{l+L-1}{l-k} \frac{[\gamma^2/(4\alpha^2)]^k}{k!} \\
&= e^{-\frac{\Lambda}{2(\sigma_1^2+\sigma_2^2)}} \left[\frac{\sigma_1^2}{\sigma_1^2+\sigma_2^2}\right]^L \sum_{l=0}^{L-1} \left[\frac{\sigma_2^2}{\sigma_1^2+\sigma_2^2}\right]^l \sum_{k=0}^{l} \binom{l+L-1}{l-k} \frac{1}{k!} \left[\frac{\Lambda\sigma_1^2}{2\sigma_2^2(\sigma_1^2+\sigma_2^2)}\right]^k
\end{aligned}
$$

6. Frequency Shift Keying (FSK)

Frequency shift keying communicates information by transmitting different frequencies. It can be demodulated noncoherently (by measuring the received energy at the different frequencies). It performance is worse than coherently demodulated signals but may be simpler.

$$
b(t) = \sum_{l=-\infty}^{\infty} b_l \, p_T(t-lT), \quad b_l \in \{+1,-1\}
$$

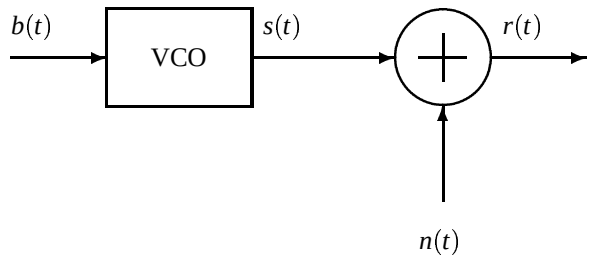

Figure 5.3: FSK Modulator

$$s(t) = \sqrt{2P}\sum_{l=-\infty}^{\infty}\cos(2\pi(f_c + b(t)\Delta f)t + \theta)\,p_T(t - lT)$$

where Δf is half the difference between the two transmitted frequencies and θ is an unknown (to the receiver) phase. We let $f_0 = f - \Delta f$ and $f_1 = f + \Delta f$. When $b_i = +1$ then a signal at frequency f_1 is transmitted. When $b_i = -1$ then a signal at frequency f_0 is transmitted. The two frequencies f_0 and f_1 are separated far enough to make the two signals orthogonal. (Minimum shift keying has the minimum separation in order to make the signals orthogonal).

The receiver decides signal -1 was transmitted if $|Y_{-1}| > |Y_1|$ and otherwise decides signal 1. The random variables at the output of the low pass filters are

$$\begin{aligned}
X_{c,1}(iT) &= \sqrt{E}\delta(b_{i-1},1)\cos(\theta) + \eta_{c,1}\\
X_{s,1}(iT) &= \sqrt{E}\delta(b_{i-1},1)\sin(\theta) + \eta_{s,1}\\
X_{c,-1}(iT) &= \sqrt{E}\delta(b_{i-1},-1)\cos(\theta) + \eta_{c,-1}\\
X_{s,-1}(iT) &= \sqrt{E}\delta(b_{i-1},-1)\sin(\theta) + \eta_{s,-1}
\end{aligned}$$

where $\delta(a,b) = 1$ if $a = b$ and is zero otherwise. In the absence of noise ($\eta_{x,i} = 0$) it is easy to see that when $b_{i-1} = +1$ that $Y_1 = \sqrt{E}$ and $Y_{-1} = 0$. The error probability of binary FSK is

$$P_{e,b} = \frac{1}{2}e^{-E_b/2N_0}.$$

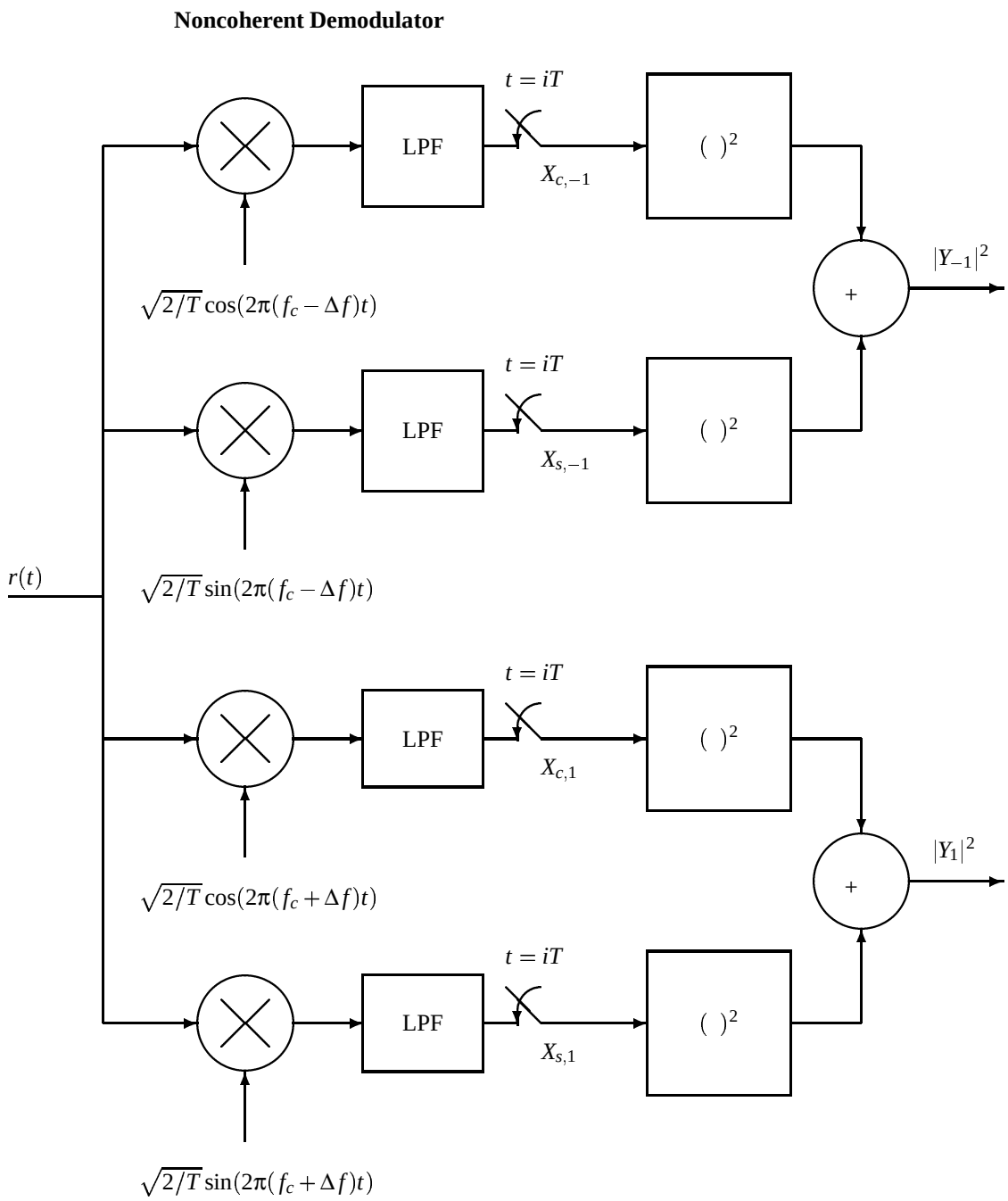

Figure 5.4: Noncoherent Demodulator

Figure 5.5: Output Densities For Noncoherent Receivers.

Figure 5.6: Density for $Y_1 - Y_{-1}$ given +1 Transmitted.

7. Differential Phase Shift Keying (DPSK)

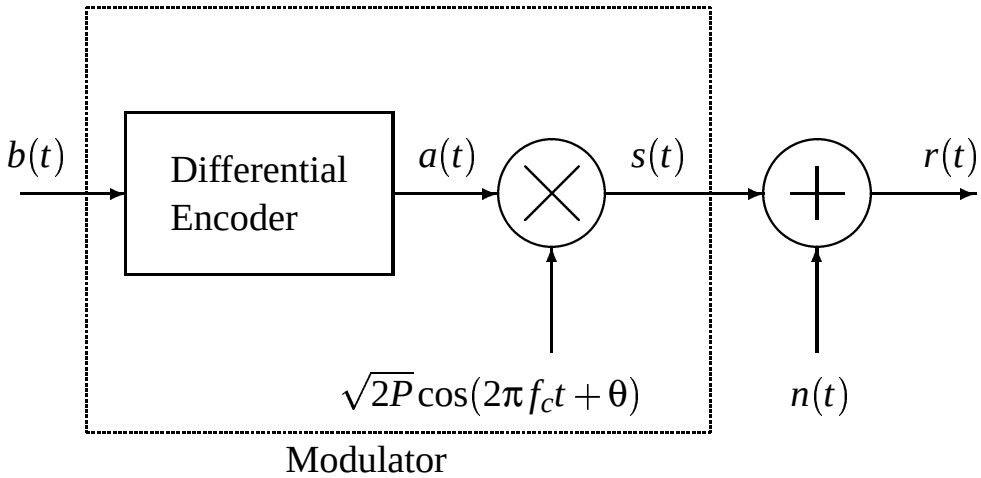

$$
\begin{aligned}
b(t) &= \sum_{l=-\infty}^{\infty} b_l \, p_T(t - lT), \quad b_l \in \{+1, -1\}. \\
a(t) &= \sum_{l=-\infty}^{\infty} a_l \, p_T(t - lT), \quad a_l \in \{+1, -1\}.
\end{aligned}
$$

Differential Encoder is such that

$$
\begin{aligned}
b_l &= 1 \Rightarrow a_l = a_{l-1} \\
b_l &= -1 \Rightarrow a_l = -a_{l-1}.
\end{aligned}
$$

For example

l	$\ldots$	-2	-1	0	1	2	3	$\ldots$
b_l		-1	1	1	-1	1	-1	
a_l	-1	1	1	1	-1	-1	1	

$$
s(t) = \sqrt{2P} a(t) \cos(2\pi f_c t + \theta).
$$

Optimum Demodulator

Figure 5.7: Error Probability of FSK with Noncoherent Detection.

Figure 5.8: Error Probability for Differential Phase Shift Keying

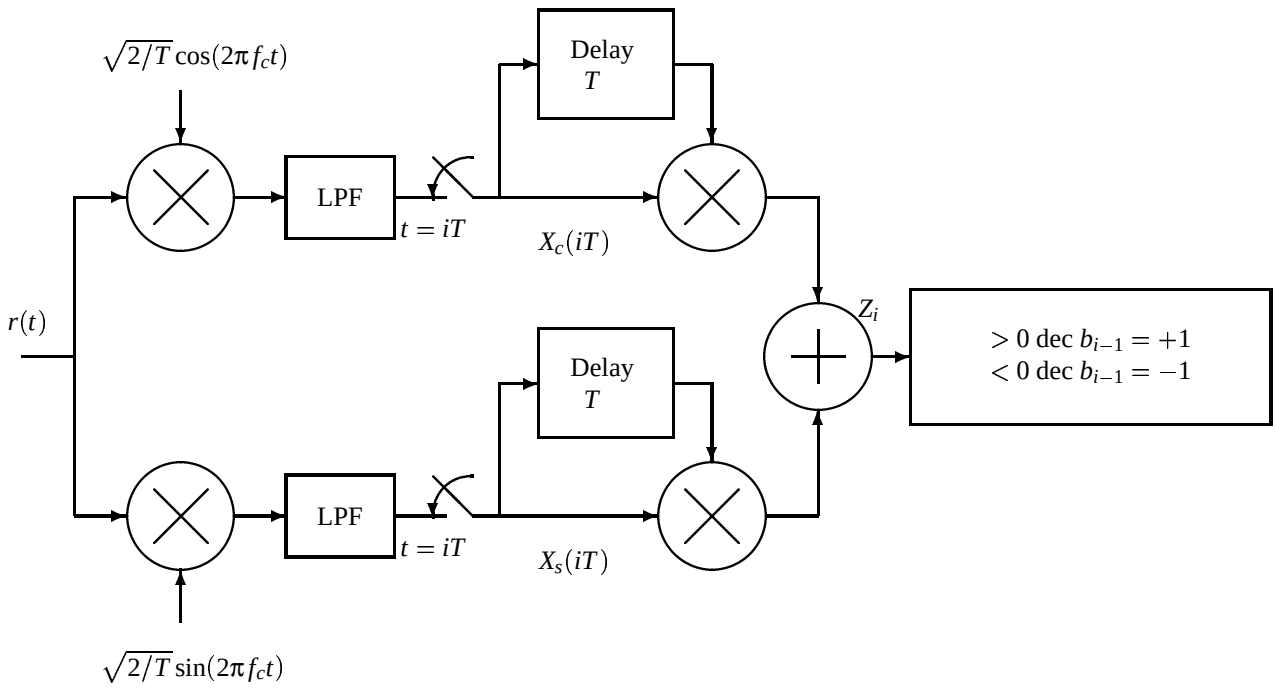

$$X_c(iT) = \sqrt{E}a_{i-1}\cos\theta + \eta_{c,i}.$$

$$X_s(iT) = \sqrt{E}a_{i-1}\sin\theta + \eta_{s,i}.$$

The random variables $\eta_{c,i}$ and $\eta_{s,i}$ are independent identically distributed Gaussian random variables with mean 0 and variance $N_0/2$. Thus

$$\begin{aligned} Z_i &= X_c(iT)X_c((i-1)T) + X_s(iT)X_s((i-1)T) \\ Z_i &= \mathrm{Re}[W(iT)W^*((i-1)T)] \end{aligned}$$

where $W(iT) = X_c(iT) - jX_s(iT)$. The error probability for DPSK is

$$P_{e,b} = \frac{1}{2}e^{-E/N_0}.$$

Thus differential phase shift keying is 3dB better than FSK with noncoherent detection. However, errors tend to occur in pairs.

To derive the above expression for DPSK consider the low pas filter with impulse response $h(t) = p_T(t)$. The output of the lowpass filters can be expressed as

$$X_c(t) = \int_{-\infty}^{\infty} \sqrt{2/T}\cos\omega_c\tau h(t-\tau)r(\tau)d\tau$$

$$\begin{aligned}
X_c(iT) &= \int_{-\infty}^{\infty} \sqrt{2/T}\cos\omega_c\tau p_T(iT-\tau)r(\tau)d\tau \\
&= \int_{(i-1)T}^{iT} \sqrt{2/T}\cos\omega_c\tau \left[\sum_{l=-\infty}^{\infty} \sqrt{2P}a_l\cos(\omega_c\tau+\theta)p_T(\tau-lT)+n(\tau)\right] d\tau \\
&= \int_{(i-1)T}^{iT} \sqrt{2P}\sqrt{2/T}a_{i-1}\cos\omega_c\tau\cos(\omega_c\tau+\theta)d\tau+\eta_{c,i}
\end{aligned}$$

$n_{c,i}$ is Gaussian random variable, mean 0 variance $N_0/2$. Assuming $\omega_c T = 2\pi n$

$$X_c(iT) = \sqrt{E}a_{i-1}\cos\theta+\eta_{c,i}$$

Similarly

$$X_s(iT) = \sqrt{E}a_{i-1}\sin\theta+n_{c,i}$$

Thus

$$Z_i = X_c(iT)X_c((i-1)T)+X_s(iT)X_s((i-1)T)$$

Note that if we write $W(iT) = X_c(iT) - jX_s(iT)$ that $Z_i = \mathrm{Re}[W(iT)W^*((i-1)T)]$. It is clear that this represents the phase difference between two consecutive symbols.

Let

$$\begin{aligned}
U_1 &= \frac{X_c(iT)+X_c((i-1)T)}{2} \\
U_2 &= \frac{X_s(iT)+X_s((i-1)T)}{2} \\
U_3 &= \frac{X_c(iT)-X_c((i-1)T)}{2} \\
U_4 &= \frac{X_s(iT)-X_s((i-1)T)}{2}
\end{aligned}$$

$$Z_i = U_1^2+U_2^2-(U_3^2+U_4^2)$$

Assume $b_{i-1} = +1$ so that $a_{i-1} = a_{i-2}$ then

$$\begin{aligned}
P_{e,0} &= P\{Z<0|\ a_{i-1}=a_{i-2}\} \\
&= P\left\{U_1^2+U_2^2 \le U_3^2+U_4^2\right\} \\
U_1 &\sim N(\mu_1,\sigma^2) \\
U_2 &\sim N(\mu_2,\sigma^2) \\
\mu_1 &= \frac{1}{2}\sqrt{2P}(a_{i-1}T\cos\theta+a_{i-2}T\cos\theta) \\
&= \frac{1}{2}\sqrt{2P}(a_{i-1}+a_{i-2})T\cos\theta \\
\mu_2 &= \frac{1}{2}\sqrt{2P}(a_{i-1}+a_{i-2})T\sin\theta \\
\sigma^2 &= \frac{1}{4}[N_0T+N_0T] \\
&= \frac{1}{2}N_0T \\
U_3 &\sim N(\mu_3,\sigma^2) \quad U_4 \sim N(\mu_4,\sigma^2) \\
\mu_3 &= 0, \qquad \mu_4 = 0,
\end{aligned}$$

$$E[U_1U_2] = E\left[\frac{X_c(iT)+X_c((i-1)T)}{2}\right]\left[\frac{X_s(iT)+X_s((i-1)T)}{2}\right]$$

$$
\begin{aligned}
&= \frac{1}{4}E\left[X_c(iT)X_s(iT)+X_c(iT)X_s((i-1)T)\right.\\
&\quad \left.+X_c((i-1)T)X_s(iT)+X_c((i-1)T)X_s((i-1)T)\right]\\
E\left[X_c(iT)X_s(jT)\right] &= E\left[X_c(iT)\right]E\left[X_s(jT)\right] \text{ since independent}\\
E[U_1U_2] &= \left(\frac{E\left[X_c(iT)\right]+E\left[X_c((i-1)T)\right]}{2}\right)\left(\frac{E\left[X_s(iT)\right]+E\left[X_s((i-1)T)\right]}{2}\right)\\
&= E[U_1]E[U_2] \Rightarrow U_1,U_2 \text{ independent}
\end{aligned}
$$

Similarly (U_1,U_3) independent (U_2,U_3) independent (U_3,U_4) independent (U_1,U_4) independent $U_2,U_4)$ independent

Thus $U_1^2+U_2^2$ is independent of $U_3^2+U_4^2$. From the results derived for noncoherent FSK it is easy to show that

$$P\{U_1^2+U_2^2 \le U_3^2+U_4^2\} = \frac{1}{2}e^{-E/N_0}.$$

Thus differential phase shift keying is 3dB better than FSK with noncoherent detection. However, errors tend to occur in pairs.

8. Problems

1. A noncoherent communication system employs the signals

$$s_i(t) = A\sin(\pi\frac{t}{T})p_T(t)\cos(2\pi f_i t+\theta_i) \;\; i=0,1$$

where $2\pi f_i T$ is an integer multiple of 2π and θ_i is unknown. Determine the optimal receiver for this system. Determine the error probability. (Assume additive white Gaussian noise).

2. Consider the following DPSK (differential phase shift keying) communication system. The information to be transmitted is given by the following data waveform

$$b(t) = \sum_{l=-\infty}^{\infty} b_l p_T(t-lT)$$

where b_l is a sequence of i.i.d. random variables with $P\{b_l=+1\}=P\{b_l=-1\}=1/2$. The differential encoder produces another data stream

$$a(t) = \sum_{l=-\infty}^{\infty} a_l p_T(t-lT)$$

where $a_l = a_{l-1}$ if $b_l = 1$ otherwise $a_l \neq a_{l-1}$. The transmitted waveform is

$$s(t) = \sum_{l=-\infty}^{\infty} \sqrt{2P}a_l p_T(t-lT)\cos(2\pi f_c t+\theta)$$

where θ is unknown to the receiver and P is the power. Consider the receiver shown below. Determine the error probability for deciding on b_l. Express your answer in terms of the signal energy and the noise (additive white Gaussian) spectral density $N_0/2$ Hint: Use the following transformation of variables

$$
\begin{aligned}
U_1 &= \frac{X_c(iT)+X_c((i-1)T)}{2}\\
U_2 &= \frac{X_s(iT)+X_s((i-1)T)}{2}\\
U_3 &= \frac{X_c(iT)-X_c((i-1)T)}{2}\\
U_4 &= \frac{X_s(iT)-X_s((i-1)T)}{2}
\end{aligned}
$$

then write the error probability in terms of these variables.

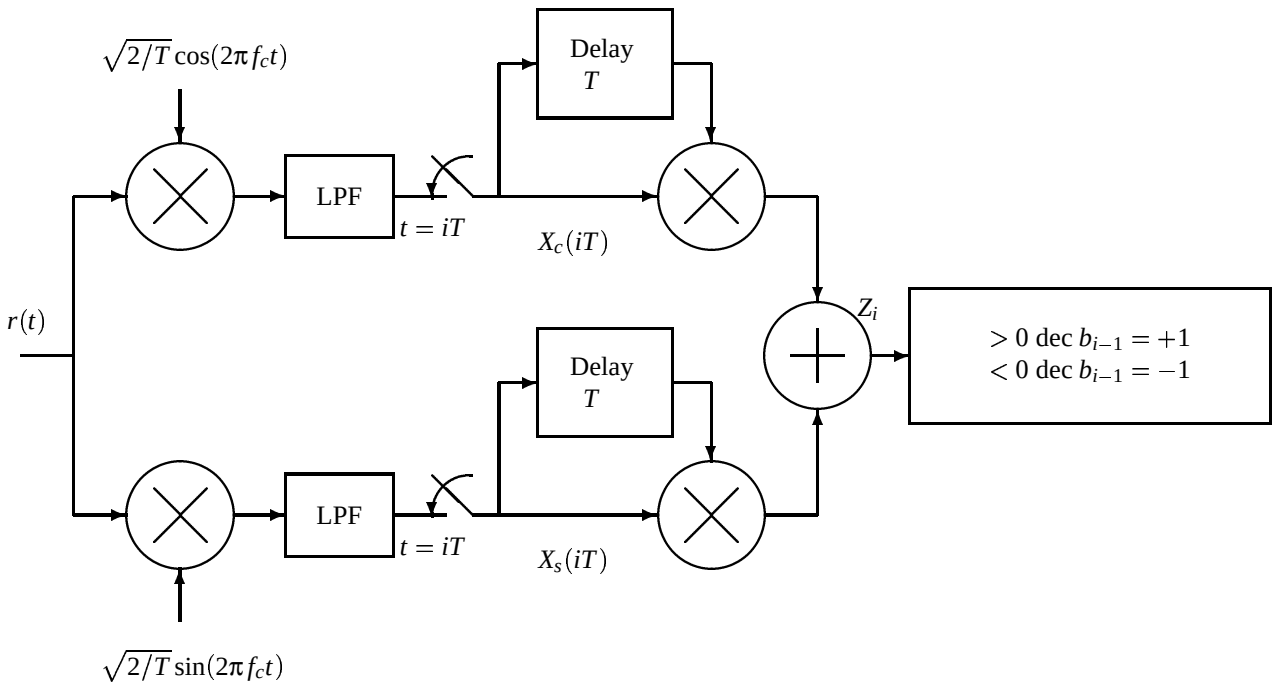

3. Determine the loss in signal-to-noise ratio for using hard decisions (versus soft decisions) on an additive white Gaussian noise channel using orthogonal signals and noncoherent detection (based on the cutoff rate) at low signal-to-noise ratios.

4. (a) Consider a communication system using DPSK. Show that over anytime duration of $2T$ seconds the two possible transmitted signals are orthogonal. That is, given an arbitrary reference signal (phase) in the time period$((l-2)T,(l-1)T]$, show that the two waveforms corresponding to $b_l = +1$ and $b_l = -1$ are orthogonal.
(b) Using the above or otherwise, derive the optimal receiver for detecting data bit b_l.
(c) Show that the optimum receiver is identical to that derived in class (if it is not already in that form).

5. (a) Consider a communication system with modulation and demodulation producing a discrete time (memoryless) channel with transition probabilities $p(b|a)$, $a \in A$, $b \in B$. If the decoder knows these transition probabilities then we showed in class (and in the homework) that codes of rate R exist to transmit information with error probability upper bounded by

$$P_e \leq 2^{-N(R_0-R)}$$

where R_0 is called the cutoff rate. In this problem consider a communication system with a receiver that does not know exactly the transition probabilities. The receiver uses transition probability $p^*(b|a)$ as if they were the actual transition probabilities. (The channel statistics and the receiver statistics are memoryless). Show that there exist codes of rate R such that

$$P_e \leq 2^{N(R_0^*-R)}$$

where

$$R_0^* = -\ln J_0^*,$$

$$J_0^* = \min_{\lambda \geq 0} \min_{p(x)} E[J_\lambda^*(X_1, X_2)]$$

and

$$J_\lambda^*(a_1, a_2) = \sum_{b \in B} p(b|a_1) \left[\frac{p^*(b|a_2)}{p^*(b|a_1)} \right]^\lambda .$$

(b) Show that when $p^*(b|a) = p(b|a)$ the optimizing value for λ is 1/2 so the result reduces to the normal cutoff rate.
(Hint: Use Cauchy inequality:

$$\left(\sum_{a \in A} p(a) w(a) u(a) \right)^2 \leq \left(\sum_{a \in A} p(a) w^2(a) \right) \left(\sum_{a \in A} p(a) u^2(a) \right)$$

with equality if $w(a) = cu(a)$ for some positive constant c and use $w(a) = (p(b|a))^{(1-\lambda)/2}$ and $u(a) = (p(b|a))^{\lambda/2}$).
(c) Show that for a noncoherent detection of binary (orthogonal) FSK the exponential density functions (used in the receiver) results in square law combining (as opposed to maximum likelihood combining) and that the cutoff rate has the form

$$R_0^* = 1 - \log_2(1 + D^*).$$

Determine an explicit form for D^*.

6. Let H_0 and H_1 be two events. Let $p_i(x_1, \ldots, x_n)$ be the conditional density of $X_1, \ldots, X_n$ given H_i occurred.
(a) Assume that given H_i, $\{X_j\}_{j=1}^n$ is a sequence of i.i.d. Gaussian random variables with mean $(-1)^i \sqrt{E}$ and variance $N_0/2$. Use the Chernoff bound to show that

$$P\{p_1(\underline{X}) \geq p_0(\underline{X}) | H_0\} \leq e^{-nE/N_0}$$

(b) Now let $X_1, \ldots, X_n$ be independent discrete random variables taking values +1 and -1 with

$$\begin{aligned} P\{X_i = +1|H_0\} &= p, \\ P\{X_i = -1|H_0\} &= 1 - p, \\ P\{X_i = -1|H_1\} &= p, \\ P\{X_i = +1|H_1\} &= 1 - p. \end{aligned}$$

Thus if the number of components of $\underline{x}$ equal to +1 is d then $p_0(\underline{x}) = p^d(1-p)^{n-d}$ and $p_1(\underline{x}) = p^{n-d}(1-p)^d$. Use the Chernoff bound to show that

$$P\{p_1(\underline{X}) \geq p_0(\underline{X}) | H_0\} \leq e^{-n(-\ln\sqrt{4p(1-p)})}$$

(c) Again let $X_1, \ldots, X_n$ be independent discrete random variables with X_i taking nonnegative integer values only. Let

$$p_0(x_1, \ldots, x_n) = \prod_{i=1}^n \frac{\lambda_0^{x_i} e^{-\lambda_0}}{x_i!}, \quad x_i \geq 0, \quad 1 \leq i \leq n$$

and

$$p_1(x_1, \ldots, x_n) = \prod_{i=1}^n \frac{\lambda_1^{x_i} e^{-\lambda_1}}{x_i!}$$

If $\lambda_1 > \lambda_0$ find the best Chernoff bound on

$$P_{e,0} = P\{p_1(\underline{X}) \geq p_0(\underline{X}) | H_0\}$$

and

$$P_{e,1} = P\{p_0(\underline{X}) \geq p_1(\underline{X}) | H_1\}.$$

Let s_i^* be the optimal value of s for minimizing the bound to $P_{e,i}$. Show $s_1^* = 1 - s_0^*$.

(d) Again let $X_1, \ldots, X_{2n}$ be independent discrete random variables with X_i taking nonnegative integer values only. Let

$$p_0(x_1, \ldots, x_{2n}) = \prod_{i=1}^{n} \frac{\lambda_1^{x_i} e^{-\lambda_1}}{x_i!} \prod_{i=n+1}^{2n} \frac{\lambda_0^{x_i} e^{-\lambda_0}}{x_i!}, \quad x_i \geq 0, \quad 1 \leq i \leq 2n$$

and

$$p_1(x_1, \ldots, x_{2n}) = \prod_{i=1}^{n} \frac{\lambda_0^{x_i} e^{-\lambda_0}}{x_i!} \prod_{i=n+1}^{2n} \frac{\lambda_1^{x_i} e^{-\lambda_1}}{x_i!}$$

If $\lambda_1 > \lambda_0$ find the best Chernoff bound on

$$P_{e,0} = P\{p_1(\underline{X}) \geq p_0(\underline{X}) | H_0\}$$

and

$$P_{e,1} = P\{p_0(\underline{X}) \geq p_1(\underline{X}) | H_1\}.$$

7. (a) Show that $\sum_{i=1}^{\infty} \phi_i(t)\phi_i^*(s) = \delta(t-s)$ for any complete orthonormal set of functions $\phi_i(t)$. (Hint: Show that the above function satisfies the definition of a delta function, that

$$\int_{-\infty}^{\infty} f(t)\delta(t-s)dt \;=\; f(s)$$

for all functions $f(t)$).

(b) Let $K(s,t)$ be a positive covariance function of the zero mean Gaussian random process $X(t)$. Let $K^{-1/2}$ be the negative square root of this function as defined in class. Show that the process

$$Y(s) \;=\; \int K^{-1/2}(s,t)X(t)dt$$

is a white Gaussian noise process. (You need to show that $E[Y(s)Y^*(t)] = \delta(t-s)$).

8. Let $K(s,t)$ be a real covariance matrix of a random process with eigenvalues λ_i and (real) eigenfunctions ϕ_i. Define (as in class) $K^2(s,t)$ as

$$K^2(s,t) = \int K(s,u)K(u,t)du$$

and $K^n(s,t)$ as

$$K^n(s,t) = \int K^{n-1}(s,u)K(u,t)du.$$

Also define $e^K(s,t)$ as

$$e^{K(s,t)} = \sum_{n=0}^{\infty} \frac{K^n(s,t)}{n!}.$$

Show that

$$e^{K(s,t)} = \sum_{i=1}^{\infty} e^{\lambda_i} \phi_i(s)\phi_i(t).$$