EECS 270 Spring 2023 HW2 answers.

1. .
   a. $34_{10}=2^5+2^2=$ 100010
   b. $137_{10} = 2^7+2^3+2^0=$ 1000 1001 = 89_{16}
   c. $2C2_{16}$ = 10 1100 0010
   d. 10001010001001000010_2 = 1000 1010 0010 0100 0010_2= $8A242_{16}$

2. (extra spaces just added for clarity (as mentioned in class). You can ignore them.
   a. 32_{10} → 6-bit 2's complement → value out of range
   b. -32_{10} → 6-bit 2's complement → 10 0000
   c. -13_{10} → 4-bit 2's complement → value out of range
   d. 0_{10} → 5-bit 2's complement → 0 0000
   e. 38_{10} → 8-bit 2's complement → 0010 0110
   f. -160_{10} → 8-bit 2's complement → value out of range
   g. -122_{10} → 8-bit 2's complement → 1000 0110
   h. 122_{10} → 8-bit 2's complement → 0111 1010

3. .

	Sum	Carry	2's comp.	Unsigned.
a. 1011+0010	1101	0010	-5 + 2 =-3	11+2=13
b. 0011+0010	0101	0010	3 + 2 = 5	3 + 2 = 5
c. 0110+1111	0101	1110	6+-1=5	6+15=5

4. !(A+B)+!A*C = !A*!B + !A*C = (!A*!B*C + !A*!B*!C) + (!A*B*C + !A*!B*C). Note that two are the same, so !A*!B*C + !A*!B*!C + !A*B*C.

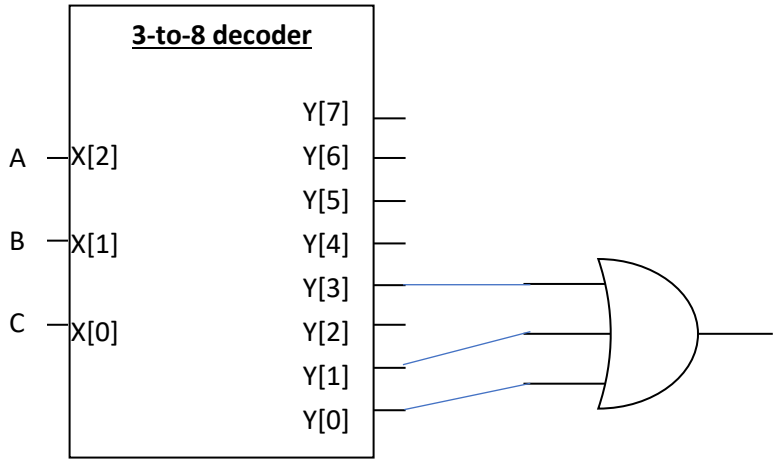

5. See pages 192 and 193 of our text. The answer below was taken from one of the students because it's clearer and better organized than mine (they got 1 point of extra credit).

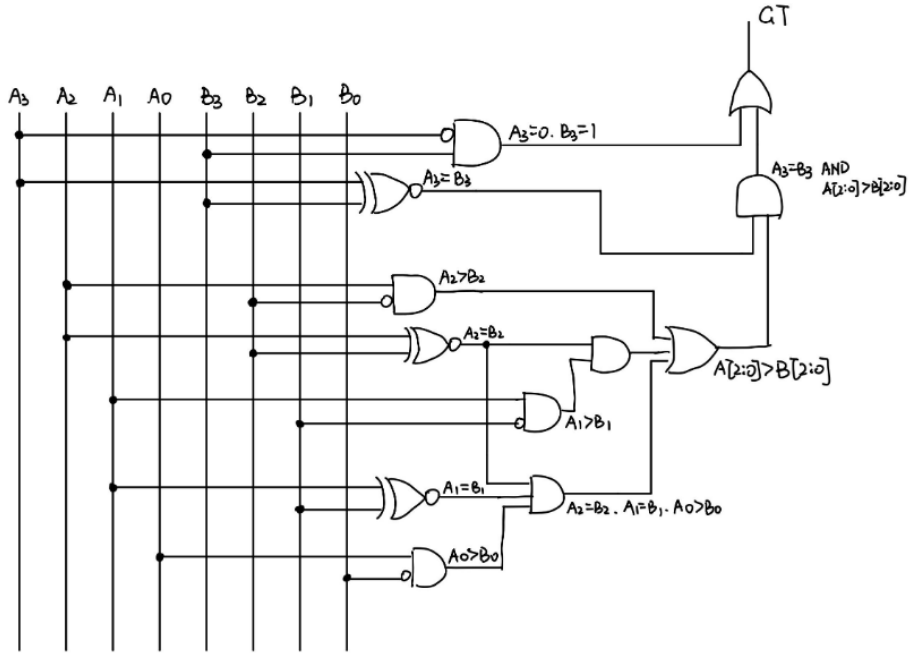

6. .
   a. 32.768 kHz; 30.51757us
   b. 10ns
   c. 0.666667 ns
   d. 0.416667 ns

7. .
   a. 1 Hz
   b. 1 KHz
   c. 50 MHz
   d. 1 GHz
   e. 667 GHz.

8.

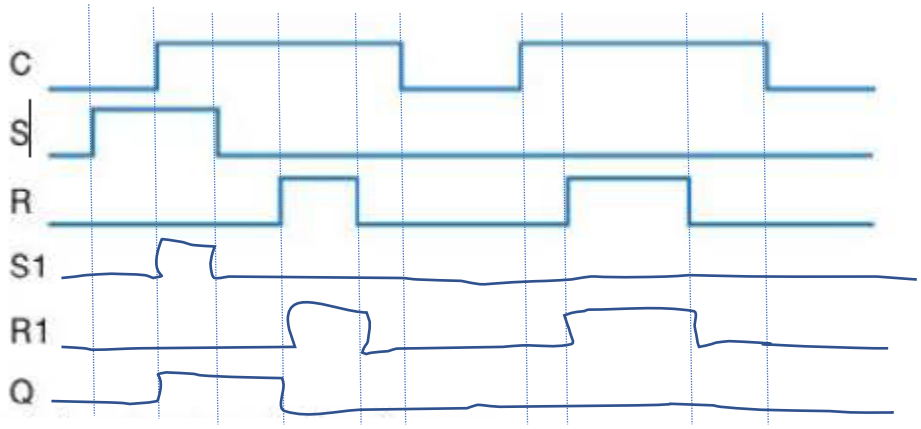

9. .

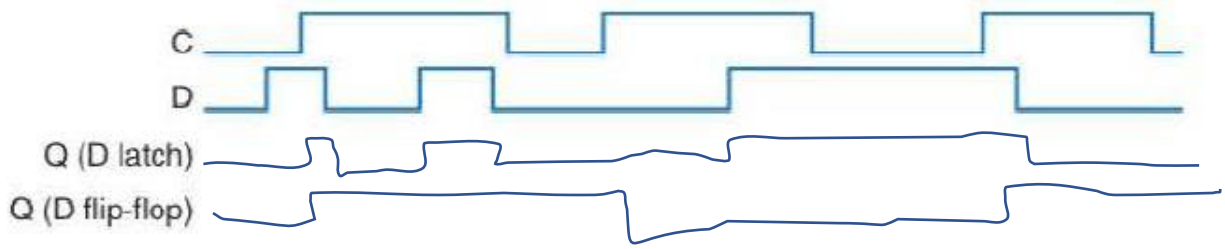

Somewhat neater version of 9:

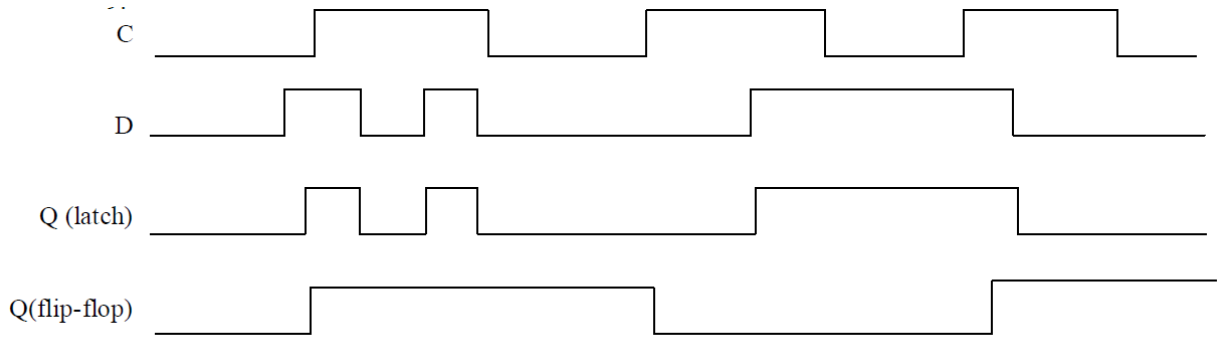

10.