Lecture Notes 12: Digital Cellular Communications

Consider a cellular communications system with hexagonal cells each containing a base station and a number of mobile units.

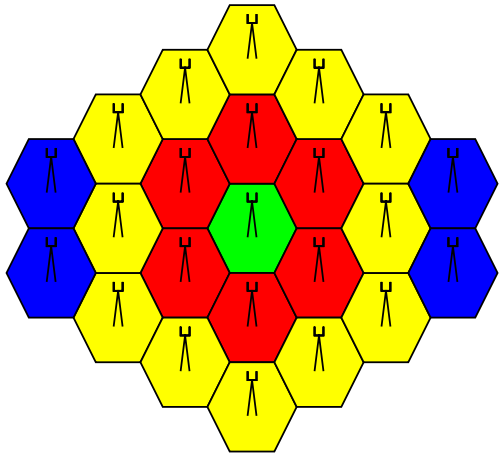

Figure 150: Celluar Communication System

- **Forward Channel (Outbound)** The link from the base station to the mobile unit.
- **Reverse Channel (Inbound)** The link from the mobile to the base station.

Assumptions

- Each cell is divided into 3 sectors and perfect isolation is possible between sectors.
- All users employ different spreading codes.
- Perfect power control (all fast fading (Rayleigh) and slow fading (due to shadowing). The power received at the mobile (or base) from different users is the same.
- Negligible thermal noise.
- Voice Activity results in reduced interference.
- Every cell uses the same frequency band. Interference from other cells is included.
- Bandwidth W, Data Rate R_b.

Consider user A. The output of the receiver matched to user A's code sequence is

$$X(T) = \sqrt{E}b_0 + \eta$$

where η accounts for the interference from all other users and b_0 denotes the data bit transmitted $\in \{+1, -1\}$.

The variance of η is given by

$$\sigma^2 = \frac{K-1}{3N}E$$

assuming random delays for the interfering users and random phases.

If on the other hand we looked at the worst possible phase and delay for each of the interfering users the variance would be

$$\sigma^2 = \frac{K-1}{N}E$$

The ratio of the magnitude of the output due to the desired signal and the square root of the variance of the interference determines the signal-to-noise ratio. Assuming the worst case phases and delays

$$SNR = \frac{\sqrt{E}}{\sigma} = \sqrt{\frac{N}{K-1}}$$

If we were not using any coding then the error probability (under a Gaussian approximation) is given by

$$P_{e,b} = Q(SNR)$$

For other coding schemes the relation between the error probability and signal-to-noise ratio

is more complicated.

However, if an acceptable signal-to-noise ratio (at the output of the demodulator) is determined from the coding scheme employed then it is possible to calculate the capacity (calls per cell) of a Direct Sequence CDMA

The voice activity factor (usually taken to be 1/2) reduces the amount of interference by turning down the power when slower data rates are possible (because of voice inactivity).

The interference from other cells is taken to be 66% of the interference from within the cell of the user.

Thus the variance of the interference can be modified to taken account the voice activity and the interference from other cells as follows

$$\sigma^2 = \frac{(K-1)ED}{NF}$$

where

$D =$ Voice Activity Factor ..... $1/2$

$F =$ Frequency Reuse Factor 0.6

The modified signal-to-noise ratio is

$$SNR = \sqrt{\frac{N}{K-1}F/D} = \sqrt{\frac{FW}{(K-1)R_b D}}$$

Thus the number of calls per sector K_s for an output signal-to-noise ratio of SNR is

$$\begin{aligned} K_s &= 1 + \frac{W}{R_b}\frac{1}{(SNR)^2}\frac{1}{D}F \\ &\approx \frac{W}{R_b}\frac{1}{(SNR)^2}\frac{1}{D}F \end{aligned}$$

The number of calls per cell is then K_c is given by

$$K_s \approx G\frac{W}{R_b}\frac{1}{(SNR)^2}\frac{1}{D}F$$

Example

$$\begin{aligned} W &= 1.25 \text{ MHz} \\ R_b &= 9600 \text{ bits/second} \\ (SNR)^2 &= 6dB = 4 \\ G &= 3 \text{ sectors/cell} \end{aligned}$$

Users/cell for DS-CDMA = 117.2 users per 1.25 MHz. per cell.

FDMA has a capacity of 6 channels or users per cell per 1.25 MHz.

TDMA has a capacity of 17.6 channels or users per cell per 1.25 MHz.

Caveat: These number are quite optimistic (especially for DS-CDMA). Many engineers believe that the capacity for CDMA is more realistically on the order of 40-50 calls/cell. Imperfect power control is one key factor that reduces the actual capacity coupled with the fast fading which can not be compensated for by power control.

Potential Advantages of CDMA for Digital Cellular

- Voice Activity
- No Equalizer (to eliminate intersymbol interference)
- One Radio per Basestation (Front end)
- Soft Handoff
- No Guard Time (Required by TDMA)
- Less Fading
- Frequency Management Eliminated
- Frequency Reuse=1

Disadvantages:

- Power Control
- Transition from Narrowband system to wideband system

IS-95 Standard for Cellular Transmission

- Speech Encoding
- Network Issues
- Reverse Link
  - Error Control Coding
  - Modulation
  - Spreading
- Forward Link
  - Error Control Coding
  - Modulation
  - Spreading

Speech Encoder

- Voice is encoded by means of a variable rate speech encoder. The possible data rates are 8600 bps, 4000 bps, 2000 bps, 800 bps. When operating at a lower rate users turn down the power on forward link and gate the power off on the reverse link (to maintain a fixed E_b/N_0) and thus cause less interference for other users. After a small amount of overhead (CRC and tail bits for the convolutional code) the rates are 9600, 4800, 2400 and 1200 bits/second.
- The system bandwidth of 1.23MHz using pseudo-random spreading-codes. Multiple users occupy the whole bandwidth simultaneously (but with different phases of a very long spreading code)
- The near-far problem typical of DS-CDMA is solved with power control.

Network Issues

Logically there are a number of different "channels" (using different orthogonal Walsh functions on the forward link and different phases of a spreading code on the reverse link) besides those used for sending voice traffic. These include the following:

Forward Traffic Channels

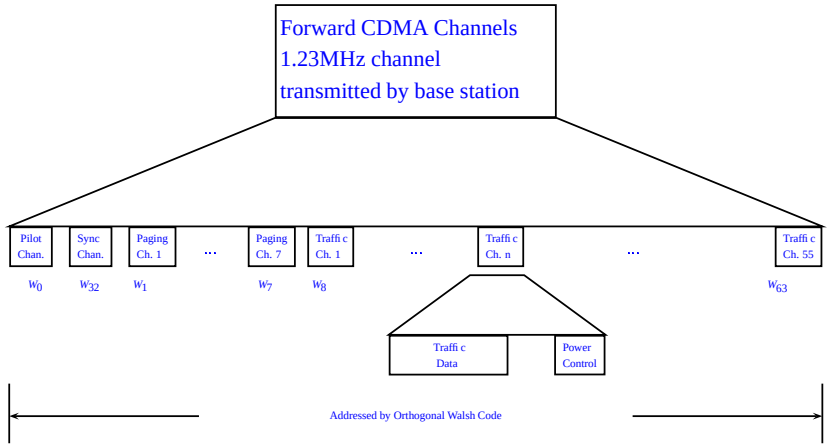

Forward Traffic Channels

- **Pilot Channel:** Transmitted on the forward channel and used to identify the base stations within range of the mobile. The mobile keeps a list of the nearest base stations. This channel is also used to provide phase synchronization for the mobile and channel gain estimates.
- **Paging Channel:** Transmitted on the forward channel and used in setting up a call to or from a mobile. Transmits data at rates of 2400, 4800, 9600 bps. Used to assign a Walsh code (Hadamard sequence) for the forward traffic channel. It is also used to identify other neighboring base stations for the purpose of handoff processing.

Forward Traffic Channels (cont.)

- **Sync Channel:** Transmitted on the forward channel and used to bring the mobile unit into synchronization (timing) with the base. Contains timing information with regard to the long code that is used to identify users.
- **Power Control Subchannel:** Transmitted on the forward channel. The voice traffic is replaced with power control bits once every 1.25ms or power control group to used by the mobile to increase or decrease the transmitted power. One power control bit is transmitted with duration of 2 modulation symbols or 104.166μs. The power level for transmission of the power control bit is the same as would be transmitted by a full rate (high power) traffic channel even when the traffic channel is transmitting at a lower power level.

Reverse Traffic Channels

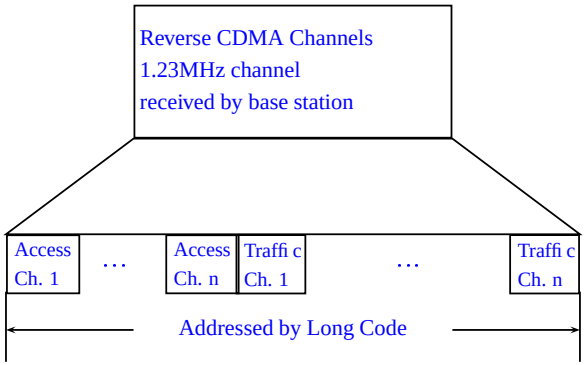

Reverse Traffic Channels

- **Access Channel:** Transmitted on the reverse channel and used to alert the base to mobile initiated calls and to respond to pages (on the paging channel). It is used in a random access mode (Aloha) by mobiles.
- **Traffic Channel:** Transmitted on the forward and reverse links. Used to transmit voice or data traffic. Can operate at rates of 1200bps, 2400bps, 4800bps, and 9600bps.

Block Diagram of Transmitter

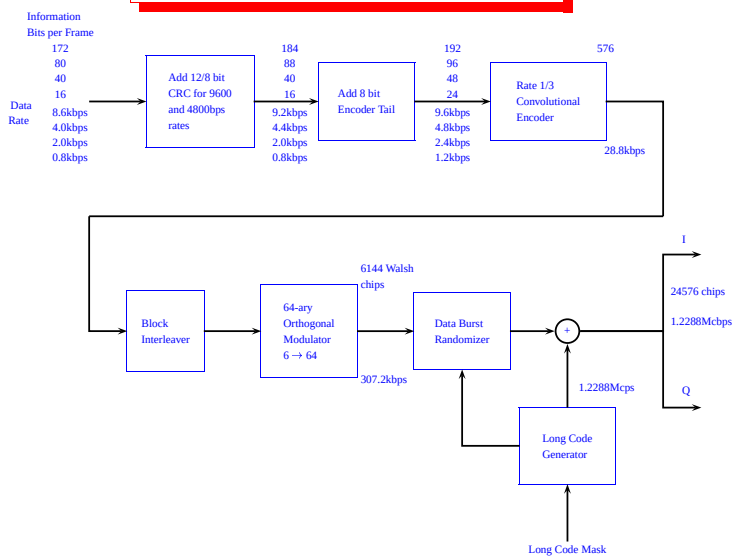

Reverse Link Traffic Channel Parameter

	Data Rate bps				
Parameters	9600	4800	2400	1200	Units
PN Chip Rate	1.2288	1.2288	1.2288	1.2288	Mcps
Code Rate	1/3	1/3	1/3	1/3	Mcps
Duty Cycle	100	50	25	12.5	percent
Code Symbol Rate	28.8	28.8	28.8	28.8	sps
Modulation	6	6	6	6	code sym/mod symbol
Walsh Chip Rate	307.2	307.2	307.2	307.2	kcps
Mod Symbol Duration	208.33	208.33	208.33	208.33	μs
PN Chips/Code Symbol	42.67	42.67	42.67	42.67	
PN Chips/Mod Symbol	256	256	256	256	
PN Chips/Walsh Chip	4	4	4	4	

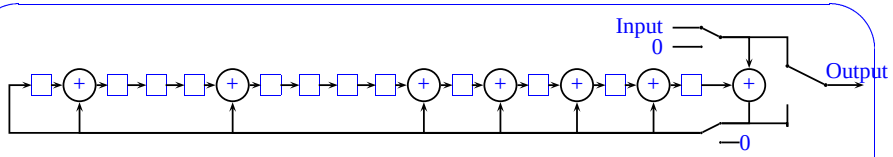

Figure 151: 12 bit CRC Encoder. Switches are up for first 172 bits and down for last 12 bits

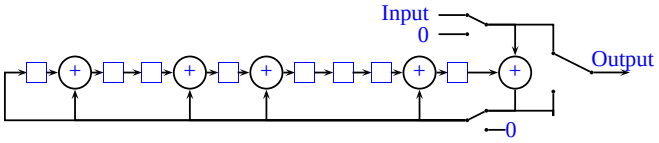

Figure 152: 8 bit CRC Encoder. Switches are up for first 172 bits and down for last 8 bits

Constraint Length 9, Rate 1/3 Convolutional Encoder

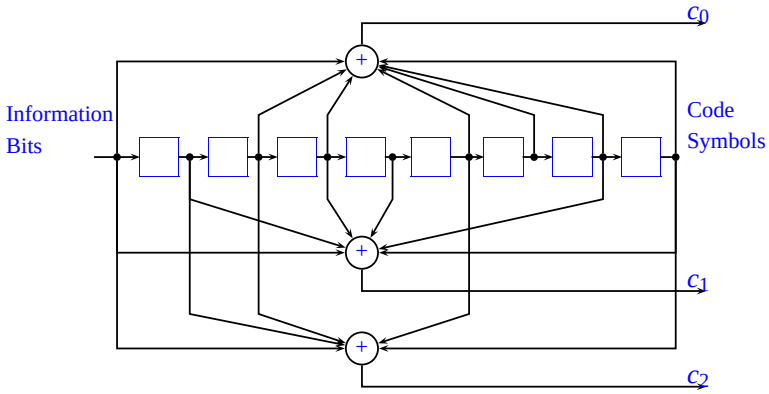

Interleaver

The convolutional encoder output is interleaved using different size interleavers. For the high rate data stream the interleaver is a 32 by 18 interleaver. Symbols are written into the interleaver memory column-wise and read out row-wise. Thus if the sequence of symbols at the input to the interleaver is c_1,c_2,c_3,... the sequence of symbols at the output of the interleaver is $c_1, c_{33}, c_{65}, \ldots$.

For the 9600 bps channel the rows are read out consecutively. For the 4800bps channel the rows are read out in the following order

1 3 2 4 5 7 6 8 9 11 10 12 13 15 14 1 17 19 18 20 21 23 22 24 25 27 26 28 29 31 30 32

For the Access channel the rows are read out in the following order

1 17 9 25 5 21 13 29 3 19 11 27 7 23 15 31 2 18 10 26 6 22 14 30 4 20 12 28 8 24 16 32

1	33	65	97	129	161	193	225	257	289	321	353	385	417	449	481	513	545
2	34	66	98	130	162	194	226	258	290	322	354	386	418	450	482	514	546
3	35	67	99	131	163	195	227	259	291	323	355	387	419	451	483	515	547
4	36	68	100	132	164	196	228	260	292	324	356	388	420	452	484	516	548
5	37	69	101	133	165	197	229	261	293	325	357	389	421	453	485	517	549
6	38	70	102	134	166	198	230	262	294	326	358	390	422	454	486	518	550
7	39	71	103	135	167	199	231	263	295	327	359	391	423	455	487	519	551
8	40	72	104	136	168	200	232	264	296	328	360	392	424	456	488	520	552
9	41	73	105	137	169	201	233	265	297	329	361	393	425	457	489	521	553
10	42	74	106	138	170	202	234	266	298	330	362	394	426	458	490	522	554
11	43	75	107	139	171	203	235	267	299	331	363	395	427	459	491	523	555
12	44	76	108	140	172	204	236	268	300	332	364	396	428	460	492	524	556
13	45	77	109	141	173	205	237	269	301	333	365	397	429	461	493	525	557
14	46	78	110	142	174	206	238	270	302	334	366	398	430	462	494	526	558
15	47	79	111	143	175	207	239	271	303	335	367	399	431	463	495	527	559
16	48	80	112	144	176	208	240	272	304	336	368	400	432	464	496	528	560
17	49	81	113	145	177	209	241	273	305	337	369	401	433	465	497	529	561
18	50	82	114	146	178	210	242	274	306	338	370	402	434	466	498	530	562
19	51	83	115	147	179	211	243	275	307	339	371	403	435	467	499	531	563
20	52	84	116	148	180	212	244	276	308	340	372	404	436	468	500	532	564
21	53	85	117	149	181	213	245	277	309	341	373	405	437	469	501	533	565
22	54	86	118	150	182	214	246	278	310	342	374	406	438	470	502	534	566
23	55	87	119	151	183	215	247	279	311	343	375	407	439	471	503	535	567
24	56	88	120	152	184	216	248	280	312	344	376	408	440	472	504	536	568
25	57	89	121	153	185	217	249	281	313	345	377	409	441	473	505	537	569
26	58	90	122	154	186	218	250	282	314	346	378	410	442	474	506	538	570
27	59	91	123	155	187	219	251	283	315	347	379	411	443	475	507	539	571
28	60	92	124	156	188	220	252	284	316	348	380	412	444	476	508	540	572
29	61	93	125	157	189	221	253	285	317	349	381	413	445	477	509	541	573
30	62	94	126	158	190	222	254	286	318	350	382	414	446	478	510	542	574
31	63	95	127	159	191	223	255	287	319	351	383	415	447	479	511	543	575
32	64	96	128	160	192	224	256	288	320	352	384	416	448	480	512	544	576

Interleaver

For the 4800 bps data rate each symbol is repeated twice in the interleaver memory. However, one of the two rows is not actually transmitted. Which row is selected is determined from the data bit randomizer. Similarly, for the 2400 bps data rate each symbol is repeated four times but only one of every set of four rows is actually transmitted. For the 1200 bps data rate each symbol is repeated 8 times but only one of every 8 rows is selected by the data burst randomizer.

1	17	33	49	65	81	97	113	129	145	161	177	193	209	225	241	257	273
1	17	33	49	65	81	97	113	129	145	161	177	193	209	225	241	257	273
2	18	34	50	66	82	98	114	130	146	162	178	194	210	226	242	258	274
2	18	34	50	66	82	98	114	130	146	162	178	194	210	226	242	258	274
3	19	35	51	67	83	99	115	131	147	163	179	195	211	227	243	259	275
3	19	35	51	67	83	99	115	131	147	163	179	195	211	227	243	259	275
4	20	36	52	68	84	100	116	132	148	164	180	196	212	228	244	260	276
4	20	36	52	68	84	100	116	132	148	164	180	196	212	228	244	260	276
5	21	37	53	69	85	101	117	133	149	165	181	197	213	229	245	261	277
5	21	37	53	69	85	101	117	133	149	165	181	197	213	229	245	261	277
6	22	38	54	70	86	102	118	134	150	166	182	198	214	230	246	262	278
6	22	38	54	70	86	102	118	134	150	166	182	198	214	230	246	262	278
7	23	39	55	71	87	103	119	135	151	167	183	199	215	231	247	263	279
7	23	39	55	71	87	103	119	135	151	167	183	199	215	231	247	263	279
8	24	40	56	72	88	104	120	136	152	168	184	200	216	232	248	264	280
8	24	40	56	72	88	104	120	136	152	168	184	200	216	232	248	264	280
9	25	41	57	73	89	105	121	137	153	169	185	201	217	233	249	265	281
9	25	41	57	73	89	105	121	137	153	169	185	201	217	233	249	265	281
10	26	42	58	74	90	106	122	138	154	170	186	202	218	234	250	266	282
10	26	42	58	74	90	106	122	138	154	170	186	202	218	234	250	266	282
11	27	43	59	75	91	107	123	139	155	171	187	203	219	235	251	267	283
11	27	43	59	75	91	107	123	139	155	171	187	203	219	235	251	267	283
12	28	44	60	76	92	108	124	140	156	172	188	204	220	236	252	268	284
12	28	44	60	76	92	108	124	140	156	172	188	204	220	236	252	268	284
13	29	45	61	77	93	109	125	141	157	173	189	205	221	237	253	269	285
13	29	45	61	77	93	109	125	141	157	173	189	205	221	237	253	269	285
14	30	46	62	78	94	110	126	142	158	174	190	206	222	238	254	270	286
14	30	46	62	78	94	110	126	142	158	174	190	206	222	238	254	270	286
15	31	47	63	79	95	111	127	143	159	175	191	207	223	239	255	271	287
15	31	47	63	79	95	111	127	143	159	175	191	207	223	239	255	271	287
16	32	48	64	80	96	112	128	144	160	176	192	208	224	240	256	272	288
16	32	48	64	80	96	112	128	144	160	176	192	208	224	240	256	272	288

1	9	17	25	33	41	49	57	65	73	81	89	97	105	113	121	129	137
1	9	17	25	33	41	49	57	65	73	81	89	97	105	113	121	129	137
1	9	17	25	33	41	49	57	65	73	81	89	97	105	113	121	129	137
1	9	17	25	33	41	49	57	65	73	81	89	97	105	113	121	129	137
2	10	18	26	34	42	50	58	66	74	82	90	98	106	114	122	130	138
2	10	18	26	34	42	50	58	66	74	82	90	98	106	114	122	130	138
2	10	18	26	34	42	50	58	66	74	82	90	98	106	114	122	130	138
2	10	18	26	34	42	50	58	66	74	82	90	98	106	114	122	130	138
3	11	19	27	35	43	51	59	67	75	83	91	99	107	115	123	131	139
3	11	19	27	35	43	51	59	67	75	83	91	99	107	115	123	131	139
3	11	19	27	35	43	51	59	67	75	83	91	99	107	115	123	131	139
3	11	19	27	35	43	51	59	67	75	83	91	99	107	115	123	131	139
4	12	20	28	36	44	52	60	68	76	84	92	100	108	116	124	132	140
4	12	20	28	36	44	52	60	68	76	84	92	100	108	116	124	132	140
4	12	20	28	36	44	52	60	68	76	84	92	100	108	116	124	132	140
4	12	20	28	36	44	52	60	68	76	84	92	100	108	116	124	132	140
5	13	21	29	37	45	53	61	69	77	85	93	101	109	117	125	133	141
5	13	21	29	37	45	53	61	69	77	85	93	101	109	117	125	133	141
5	13	21	29	37	45	53	61	69	77	85	93	101	109	117	125	133	141
5	13	21	29	37	45	53	61	69	77	85	93	101	109	117	125	133	141
6	14	22	30	38	46	54	62	70	78	86	94	102	110	118	126	134	142
6	14	22	30	38	46	54	62	70	78	86	94	102	110	118	126	134	142
6	14	22	30	38	46	54	62	70	78	86	94	102	110	118	126	134	142
6	14	22	30	38	46	54	62	70	78	86	94	102	110	118	126	134	142
7	15	23	31	39	47	55	63	71	79	87	95	103	111	119	127	135	143
7	15	23	31	39	47	55	63	71	79	87	95	103	111	119	127	135	143
7	15	23	31	39	47	55	63	71	79	87	95	103	111	119	127	135	143
7	15	23	31	39	47	55	63	71	79	87	95	103	111	119	127	135	143
8	16	24	32	40	48	56	64	72	80	88	96	104	112	120	128	136	144
8	16	24	32	40	48	56	64	72	80	88	96	104	112	120	128	136	144
8	16	24	32	40	48	56	64	72	80	88	96	104	112	120	128	136	144
8	16	24	32	40	48	56	64	72	80	88	96	104	112	120	128	136	144

1	5	9	13	17	21	25	29	33	37	41	45	49	53	57	61	65	69
1	5	9	13	17	21	25	29	33	37	41	45	49	53	57	61	65	69
1	5	9	13	17	21	25	29	33	37	41	45	49	53	57	61	65	69
1	5	9	13	17	21	25	29	33	37	41	45	49	53	57	61	65	69
1	5	9	13	17	21	25	29	33	37	41	45	49	53	57	61	65	69
1	5	9	13	17	21	25	29	33	37	41	45	49	53	57	61	65	69
1	5	9	13	17	21	25	29	33	37	41	45	49	53	57	61	65	69
1	5	9	13	17	21	25	29	33	37	41	45	49	53	57	61	65	69
2	6	10	14	18	22	26	30	34	38	42	46	50	54	58	62	66	70
2	6	10	14	18	22	26	30	34	38	42	46	50	54	58	62	66	70
2	6	10	14	18	22	26	30	34	38	42	46	50	54	58	62	66	70
2	6	10	14	18	22	26	30	34	38	42	46	50	54	58	62	66	70
2	6	10	14	18	22	26	30	34	38	42	46	50	54	58	62	66	70
2	6	10	14	18	22	26	30	34	38	42	46	50	54	58	62	66	70
2	6	10	14	18	22	26	30	34	38	42	46	50	54	58	62	66	70
2	6	10	14	18	22	26	30	34	38	42	46	50	54	58	62	66	70
3	7	11	15	19	23	27	31	35	39	43	47	51	55	59	63	67	71
3	7	11	15	19	23	27	31	35	39	43	47	51	55	59	63	67	71
3	7	11	15	19	23	27	31	35	39	43	47	51	55	59	63	67	71
3	7	11	15	19	23	27	31	35	39	43	47	51	55	59	63	67	71
3	7	11	15	19	23	27	31	35	39	43	47	51	55	59	63	67	71
3	7	11	15	19	23	27	31	35	39	43	47	51	55	59	63	67	71
3	7	11	15	19	23	27	31	35	39	43	47	51	55	59	63	67	71
3	7	11	15	19	23	27	31	35	39	43	47	51	55	59	63	67	71
4	8	12	16	20	24	28	32	36	40	44	48	52	56	60	64	68	72
4	8	12	16	20	24	28	32	36	40	44	48	52	56	60	64	68	72
4	8	12	16	20	24	28	32	36	40	44	48	52	56	60	64	68	72
4	8	12	16	20	24	28	32	36	40	44	48	52	56	60	64	68	72
4	8	12	16	20	24	28	32	36	40	44	48	52	56	60	64	68	72
4	8	12	16	20	24	28	32	36	40	44	48	52	56	60	64	68	72
4	8	12	16	20	24	28	32	36	40	44	48	52	56	60	64	68	72
4	8	12	16	20	24	28	32	36	40	44	48	52	56	60	64	68	72

Orthogonal Signals

0000 0101 0011 0110	0000 0101 0011 0110	0000 0101 0011 0110	0000 0101 0011 0110	0000 0101 0011 0110	0000 0101 0011 0110	0000 0101 0011 0110	0000 0101 0011 0110	0000 0101 0011 0110	0000 0101 0011 0110	0000 0101 0011 0110	0000 0101 0011 0110	0000 0101 0011 0110	0000 0101 0011 0110	0000 0101 0011 0110	0000 0101 0011 0110
0000 0101 0011 0110	1111 1010 1100 1001	0000 0101 0011 0110	1111 1010 1100 1001	0000 0101 0011 0110	1111 1010 1100 1001	0000 0101 0011 0110	1111 1010 1100 1001	0000 0101 0011 0110	1111 1010 1100 1001	0000 0101 0011 0110	1111 1010 1100 1001	0000 0101 0011 0110	1111 1010 1100 1001	0000 0101 0011 0110	1111 1010 1100 1001
0000 0101 0011 0110	0000 0101 0011 0110	1111 1010 1100 1001	1111 1010 1100 1001	0000 0101 0011 0110	0000 0101 0011 0110	1111 1010 1100 1001	1111 1010 1100 1001	0000 0101 0011 0110	0000 0101 0011 0110	1111 1010 1100 1001	1111 1010 1100 1001	0000 0101 0011 0110	0000 0101 0011 0110	1111 1010 1100 1001	1111 1010 1100 1001
0000 0101 0011 0110	1111 1010 1100 1001	1111 1010 1100 1001	0000 0101 0011 0110	0000 0101 0011 0110	1111 1010 1100 1001	1111 1010 1100 1001	0000 0101 0011 0110	0000 0101 0011 0110	1111 1010 1100 1001	1111 1010 1100 1001	0000 0101 0011 0110	0000 0101 0011 0110	1111 1010 1100 1001	1111 1010 1100 1001	0000 0101 0011 0110
0000 0101 0011 0110	0000 0101 0011 0110	0000 0101 0011 0110	0000 0101 0011 0110	1111 1010 1100 1001	1111 1010 1100 1001	1111 1010 1100 1001	1111 1010 1100 1001	0000 0101 0011 0110	0000 0101 0011 0110	0000 0101 0011 0110	0000 0101 0011 0110	1111 1010 1100 1001	1111 1010 1100 1001	1111 1010 1100 1001	1111 1010 1100 1001
0000 0101 0011 0110	1111 1010 1100 1001	0000 0101 0011 0110	1111 1010 1100 1001	1111 1010 1100 1001	0000 0101 0011 0110	1111 1010 1100 1001	0000 0101 0011 0110	0000 0101 0011 0110	1111 1010 1100 1001	0000 0101 0011 0110	1111 1010 1100 1001	1111 1010 1100 1001	0000 0101 0011 0110	1111 1010 1100 1001	0000 0101 0011 0110
0000 0101 0011 0110	0000 0101 0011 0110	1111 1010 1100 1001	1111 1010 1100 1001	1111 1010 1100 1001	1111 1010 1100 1001	0000 0101 0011 0110	0000 0101 0011 0110	0000 0101 0011 0110	0000 0101 0011 0110	1111 1010 1100 1001	1111 1010 1100 1001	1111 1010 1100 1001	1111 1010 1100 1001	0000 0101 0011 0110	0000 0101 0011 0110
0000 0101 0011 0110	1111 1010 1100 1001	1111 1010 1100 1001	0000 0101 0011 0110	1111 1010 1100 1001	0000 0101 0011 0110	0000 0101 0011 0110	1111 1010 1100 1001	0000 0101 0011 0110	1111 1010 1100 1001	1111 1010 1100 1001	0000 0101 0011 0110	1111 1010 1100 1001	0000 0101 0011 0110	0000 0101 0011 0110	1111 1010 1100 1001

0000	0000	0000	0000	0000	0000	0000	0000	1111	1111	1111	1111	1111	1111	1111	1111
0101	0101	0101	0101	0101	0101	0101	0101	1010	1010	1010	1010	1010	1010	1010	1010
0011	0011	0011	0011	0011	0011	0011	0011	1100	1100	1100	1100	1100	1100	1100	1100
0110	0110	0110	0110	0110	0110	0110	0110	1001	1001	1001	1001	1001	1001	1001	1001
0000	1111	0000	1111	0000	1111	0000	1111	1111	0000	1111	0000	1111	0000	1111	0000
0101	1010	0101	1010	0101	1010	0101	1010	1010	0101	1010	0101	1010	0101	1010	0101
0011	1100	0011	1100	0011	1100	0011	1100	1100	0011	1100	0011	1100	0011	1100	0011
0110	1001	0110	1001	0110	1001	0110	1001	1001	0110	1001	0110	1001	0110	1001	0110
0000	0000	1111	1111	0000	0000	1111	1111	1111	1111	0000	0000	1111	1111	0000	0000
0101	0101	1010	1010	0101	0101	1010	1010	1010	1010	0101	0101	1010	1010	0101	0101
0011	0011	1100	1100	0011	0011	1100	1100	1100	1100	0011	0011	1100	1100	0011	0011
0110	0110	1001	1001	0110	0110	1001	1001	1001	1001	0110	0110	1001	1001	0110	0110
0000	1111	1111	0000	0000	1111	1111	0000	1111	0000	0000	1111	1111	0000	0000	1111
0101	1010	1010	0101	0101	1010	1010	0101	1010	0101	0101	1010	1010	0101	0101	1010
0011	1100	1100	0011	0011	1100	1100	0011	1100	0011	0011	1100	1100	0011	0011	1100
0110	1001	1001	0110	0110	1001	1001	0110	1001	0110	0110	1001	1001	0110	0110	1001
0000	0000	0000	0000	1111	1111	1111	1111	1111	1111	1111	1111	0000	0000	0000	0000
0101	0101	0101	0101	1010	1010	1010	1010	1010	1010	1010	1010	0101	0101	0101	0101
0011	0011	0011	0011	1100	1100	1100	1100	1100	1100	1100	1100	0011	0011	0011	0011
0110	0110	0110	0110	1001	1001	1001	1001	1001	1001	1001	1001	0110	0110	0110	0110
0000	1111	0000	1111	1111	0000	1111	0000	1111	0000	1111	0000	0000	1111	0000	1111
0101	1010	0101	1010	1010	0101	1010	0101	1010	0101	1010	01010	0101	1010	0101	1010
0011	1100	0011	1100	1100	0011	1100	0011	1100	0011	1100	0011	0011	1100	0011	1100
0110	1001	0110	1001	1001	0110	1001	0110	1001	0110	1001	0110	0110	1001	0110	1001
0000	0000	1111	1111	1111	1111	0000	0000	1111	1111	0000	0000	0000	0000	1111	1111
0101	0101	1010	1010	1010	1010	0101	0101	1010	1010	0101	0101	0101	0101	1010	1010
0011	0011	1100	1100	1100	1100	0011	0011	1100	1100	0011	0011	0011	0011	1100	1100
0110	0110	1001	1001	1001	1001	0110	0110	1001	1001	0110	0110	0110	0110	1001	1001
0000	1111	1111	0000	1111	0000	0000	1111	1111	0000	0000	1111	0000	1111	1111	0000
0101	1010	1010	0101	1010	0101	0101	1010	1010	0101	0101	1010	0101	1010	1010	0101
0011	1100	1100	0011	1100	0011	0011	1100	1100	0011	0011	1100	0011	1100	1100	0011
0110	1001	1001	0110	1001	0110	0110	1001	1001	0110	0110	1001	0110	1001	1001	0110

$b_1 b_2 \quad \cdots \quad b_{171} b_{172}$

$b_1 b_2 \quad \cdots \quad b_{171} b_{172} \quad d_1 \cdots d_{12} t_1 \cdots \quad t_7 t_8$

$c_1 c_2 c_3 c_4 c_5 c_6 \quad \cdots \quad c_{571} c_{572} c_{573} c_{574} c_{575} c_{576}$

$c_1 c_{33} c_{65} c_{97} c_{129} c_{161} \quad \cdots \quad c_{416} c_{448} c_{480} c_{512} c_{544} c_{576}$

$w_1 w_2 \cdots w_{64} \quad \cdots \quad w_{6081} \cdots w_{6144}$

2 Data Bits

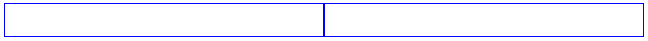

6 Coded Bits

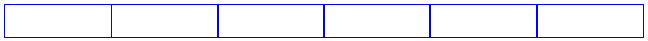

64 Walsh Chips

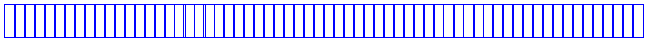

Long Code Shift Register

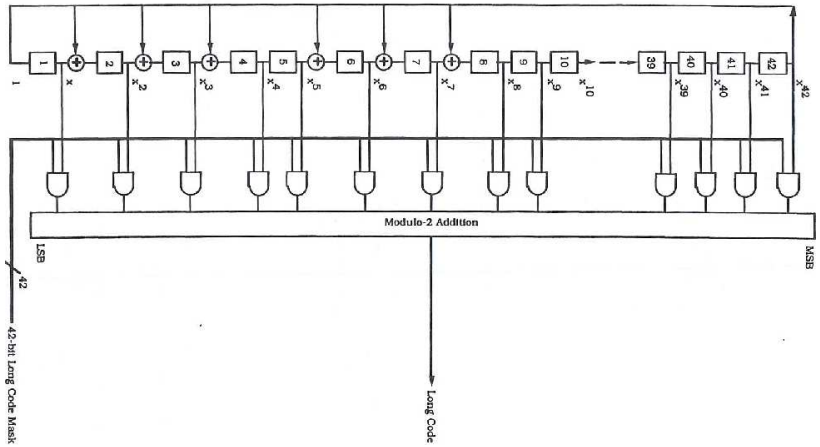

Long Code Mask

The mask for the long code depends on the channel type (traffic or access). When using the access channel the 9 high order bits of the mask are set to 110001111. The next 5 bits are set the the access channel number. The next 3 bits are set to correspond to the associate paging channel. Then next 16 bits are set to the base ID while the lowest 9 bits correspond to the pilot pn value for the current CDMA channel.

The 9 high order bits for the mask for the long code for the reverse traffic channel are 1100011000 while the low order 32 bits are set to a permutation of the mobiles electronic serial number (ESN)

Spreading

Each Walsh chip w_i is spread by a factor of 4 using the long code. Then each of the chips is used for both the inphase and quadrature phase channels. Each of these channels is scrambled according to the base stations short codes. This scrambling is equivalent to a phase shifter as shown below. Let u be the output of the long code spreading operation. Then if we express the inphase and quadrature phase signals as complex variables the output after scrambling by the short codes (s_i, s_q), $s_i, s_q \in \{\pm 1\}$ is

$$\begin{aligned} v &= us_i + jus_q \\ &= u(s_i + js_q) \end{aligned}$$

After receiving the signal there is some unknown phase shift (due to delay) in the received signal. The received signal is

$$r = ve^{j\theta}$$

To remove this scrambling function we must multiply by $s_i - js_q$.

$$z = r(s_i - js_q)$$

$$\begin{aligned} &= ve^{j\theta}(s_i - js_q) \\ &= u(s_i^2 + s_q^2)e^{j\theta}. \\ &= 2ue^{j\theta}. \end{aligned}$$

Since $s_i^2 + s_j^2 = 2$ we have removed all aspect of the scrambling function from the desired user.

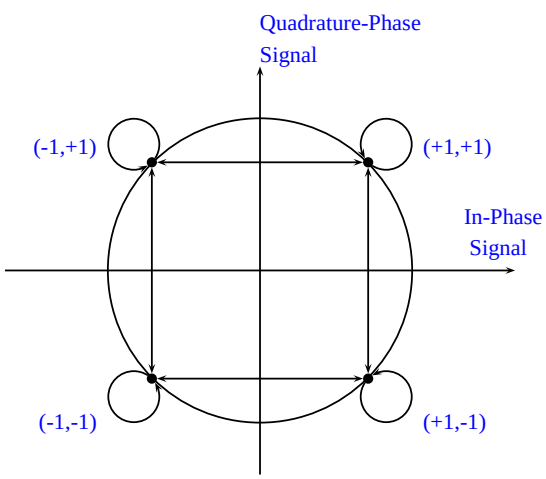

Figure 153: Offset QPSK Constellation

Short Codes

The two short codes are generated by m-sequences with feedback connections

$$\begin{aligned} i_n &= i_{n-15} + i_{n-10} + i_{n-8} + i_{n-7} + i_{n-6} + i_{n-2} \\ q_n &= q_{n-15} + q_{n-12} + q_{n-11} + q_{n-10} + q_{n-9} + q_{n-5} + q_{n-4} + q_{n-3} \end{aligned}$$

When the shift register is in the state with 14 zeros and 1 one a zero is inserted to make the length of the sequence 2^{15} (instead of $2^{15} - 1$)

Each base station uses the same shift register for the short code but the phase of the sequence is shifted by multiples of 64 chips between one base station and another base station.

Reason for Offset QPSK on Reverse Link (Mobile-to-Base)

On the link from the mobile to base battery power is a crucial issue. The use of high efficiency amplifiers warrants the use of amplifiers operating in the nonlinear range. If the signal is not of constant envelope or nearly constant envelope there would be distortion to the signal when amplified. For a nonconstant envelope signal the nonlinearity can regenerate some sidebands that have been filtered out by the baseband filters. If standard QPSK had been used the signal would be much less constant envelope (the signal going through the origin would have significant envelope variations especially after being filtered). This would cause significant distortion of the signal and the regeneration of the sidebands.

On the link from the base to the mobile battery life is not an issue and only one amplifier needs to be built (for all of the signals). Thus some care can go into designing a linear amplifier.

Phase Shifting Network

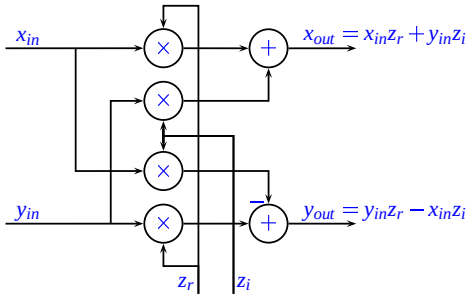

The above phase shifter does the following computation.

$$\begin{aligned}(x_{in} + jy_{in})(z_r - jz_i) &= x_{in}z_r + y_{in}z_i + j(y_{in}z_r - x_{in}z_i) \\ &= r(x_{in} + jy_{in})e^{-j\theta}\end{aligned}$$

where $re^{-j\theta} = (z_i - jz_q)$.

Frame Structure

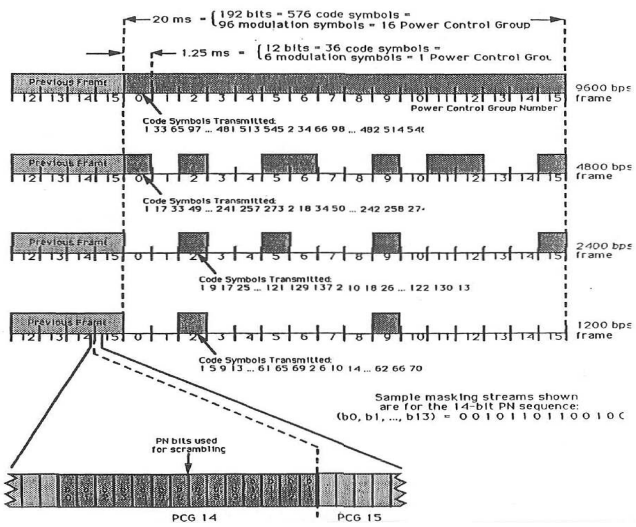

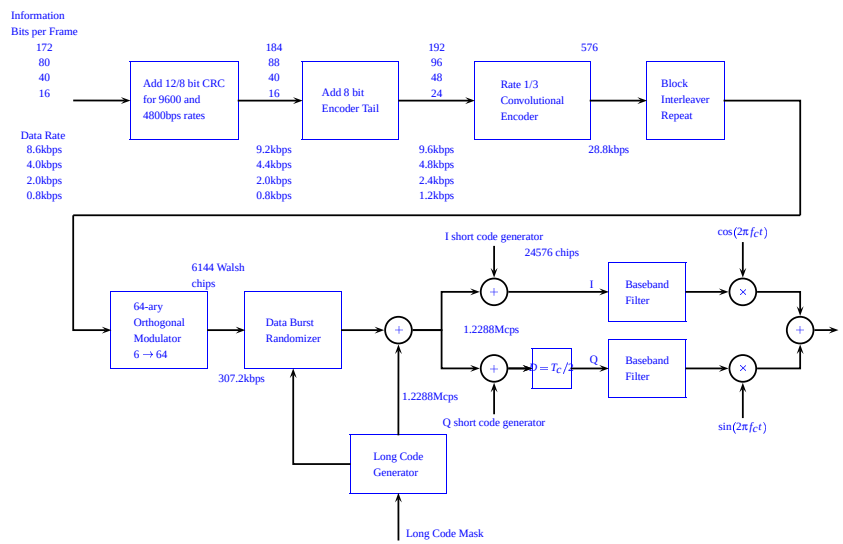

Block Diagram of Mobile Transmitter Access Channel

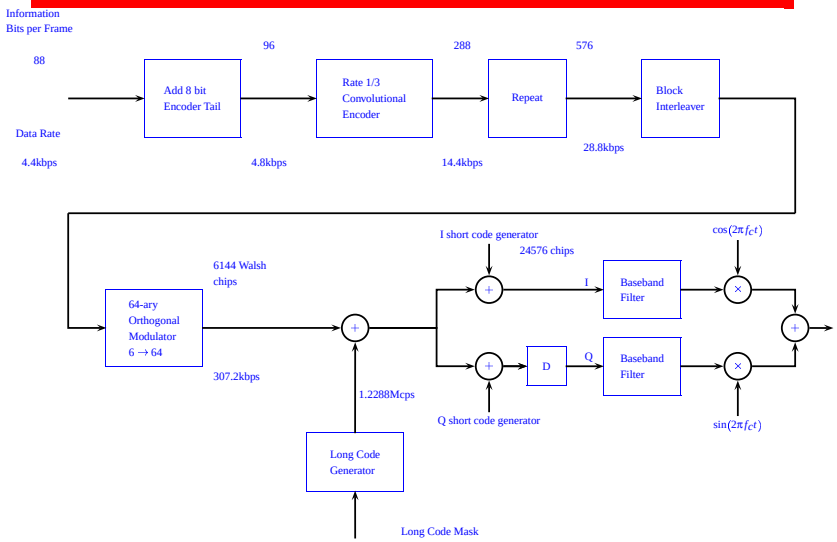

Reverse Link Access Channel Parameters

	Data Rate (bps)	
Parameters	4800	Units
PN Chip Rate	1.2288	Mcps
Code Rate	1/3	Mcps
Code Symbol Repetition	2	
Duty Cycle	100	percent
Code Symbol Rate	28.8	sps
Modulation	6	code sym/mod symbol
Modulation Symbol Rate	4800	symbols/sec
Walsh Chip Rate	307.2	kcps
Mod Symbol Duration	208.33	μs
PN Chips/Code Symbol	42.67	
PN Chips/Mod Symbol	256	
PN Chips/Walsh Chip	4	

Encoder for Reverse Link of IS-95

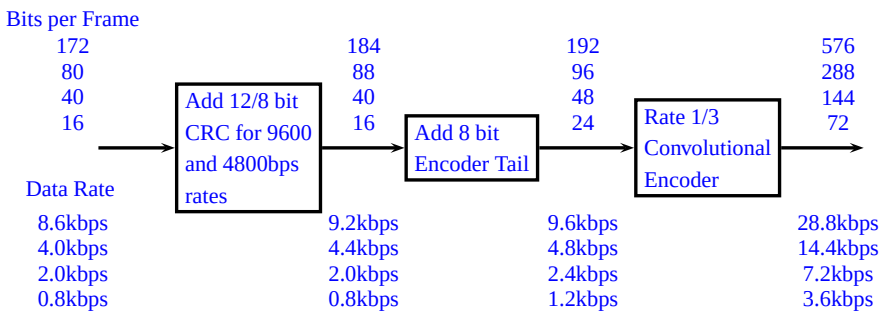

Spreading for Reverse Link of IS-95

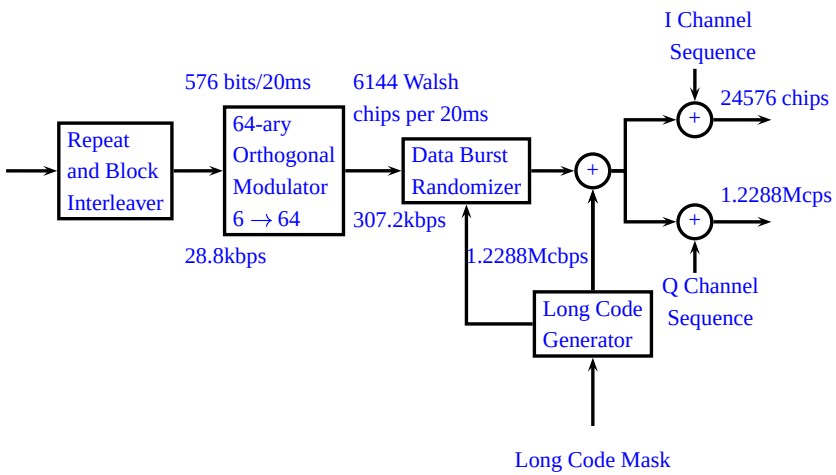

Frame Structure

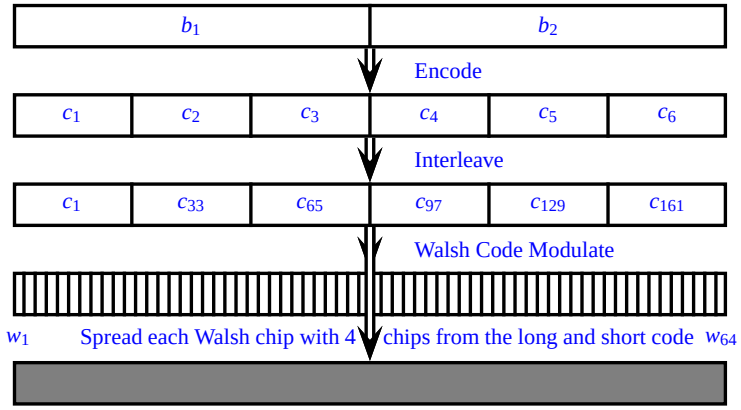

Information	b_1b_2	$\cdots$	$b_{171}b_{172}$		
CRC and Tail	b_1b_2	$\cdots$	$b_{171}b_{172}$	$d_1\cdots d_{12}t_1\cdots$	t_7t_8
Encode	$c_1c_2c_3c_4c_5c_6$	$\cdots$			$c_{571}c_{572}c_{573}c_{574}c_{575}c_{576}$
Interleave	$c_1c_{33}c_{65}c_{97}c_{129}c_{161}$	$\cdots$			$c_{416}c_{448}c_{480}c_{512}c_{544}c_{576}$
WalshCode	$w_1w_2\cdots w_{64}$	$\cdots$			$w_{6081}\cdots w_{6144}$

Notes

1. For a 9600 bps frame the data burst randomizer does nothing.
2. For a 4800 bps frame the data burst randomizer removes half of the power control bit groups. The ones removed depend on the state of the long code generator in the previous speech frame.
3. For a 2400 bps frame the data burst randomizer removes three quarters of the power control bit groups.
4. For a 1200 bps frame the data burst randomizer removes seven eights of the power control bit groups.
5. The set of power control groups transmitted by a 1200 bps frame is a subset of that transmitted by a 2400bps frame which is a subset of that transmitted by a 4800bps frame.

Reverse Channel Modulation

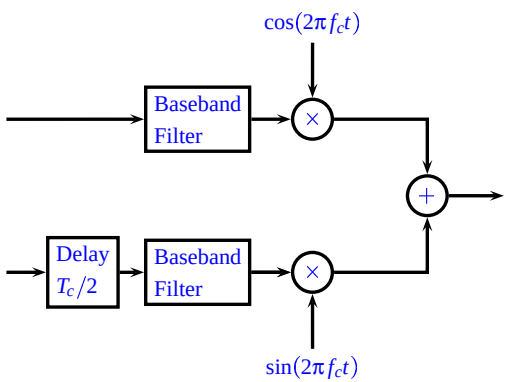

Filter Characteristics for Baseband Filter

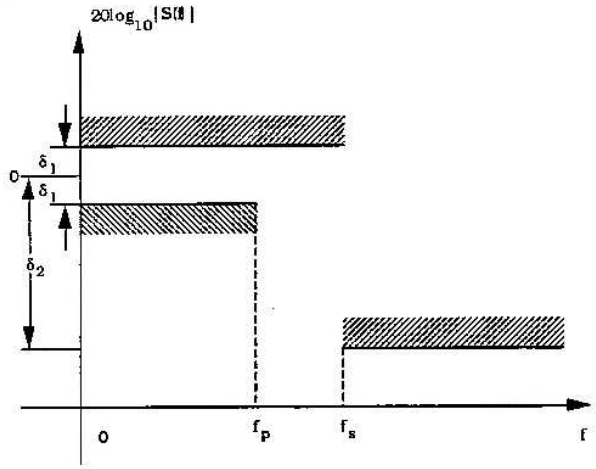

Filter Requirements: $\delta_1 = 1.5dB, \delta_2 = 40dB$, $f_p = 590kHz$, $f_s = 740kHz$

Reason for Offset QPSK on Reverse Link (Mobile-to-Base).

On the link from the mobile to base battery power is a crucial issue. The use of high efficiency amplifiers warrants the use of amplifiers operating in the nonlinear range. If the signal is not of constant envelope or nearly constant envelope there would be distortion to the signal when amplified. For a nonconstant envelope signal the nonlinearity can regenerate some sidebands that have been filtered out by the baseband filters. If standard QPSK had been used the signal would be much less constant envelope (the signal going through the origin would have significant envelope variations especially after being filtered). This would cause significant distortion of the signal and the regeneration of the sidebands.

On the link from the base to the mobile battery life is not an issue and only one amplifier needs to be built (for all of the signals). Thus some care can go into designing a linear amplifier.

Reason for Augmenting the Short Code

The short code is base station specific. In synchronizing the system knowing the starting point of the short code determines the starting point of the modulation symbols since there is exactly an integer number of modulation symbols per short code period. If there were not an integer number then the short code synchronization would not be sufficient for modulation symbol synchronization.

Power Control

- Reverse Link:
  - Open Loop Analog: 85 dB range, few microsecond response for sudden improvement in channel, but slow power build up when channel is poor so that closed loop control can occur
  - Closed Loop: 1 dB every ms, or so, 24 dB change allowed (800 Hz. rate and 1.25 ms power control groups)
- Forward Link:
  - Approximately 0.5 dB or 12% every 15-20 ms 6 dB dynamic range

System Timing

The long code and the short code are in the state with 41 or 14 zeros and a single one on Jan 6, 1980 at 00:00:00 Universal Coordinated Time (UTC). The clock rate is 1.2288MHz. The long code has period $2^{42}-1$ while the short code has period 2^{15}. The period of the commbination is $(2^{42}-1)(2^{15}) = 144115188075823104$ clock ticks.

Notes

1. The base stations transmissions are all referenced to a system wide time scale using Global Position System time scale which is synchronous with Universal Coordinated Time (UTC). GPS and UTC differ by the number of leap seconds since January 6, 1980.
2. Alignment of the long code and short code will occur again in 37 centuries.
3. The mobile attempts to synchronize to System Time based on information received from base station transmissions.

Notes

The pilot short code spreading for different base stations are identical (except in the timing or sequence phase). They differ by a multiple of 64 PN chips. Thus a mobile using a single matched filter can determine the signal strength due to pilots signals from different base stations. This information is used to decide when to handoff to another base station.

Transmitter for Pilot, Paging and Synch Channels

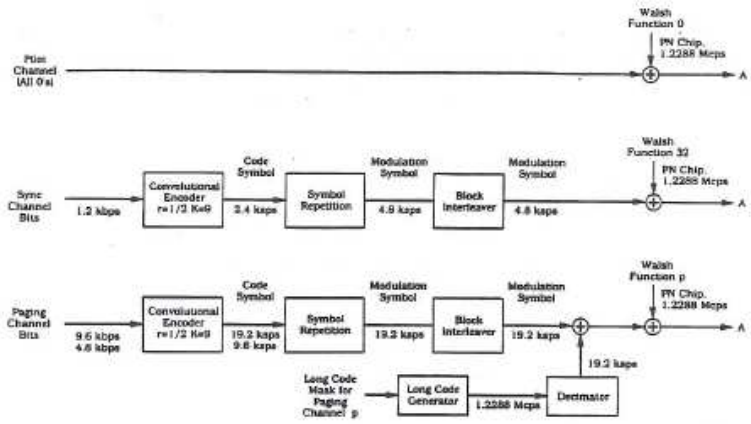

Transmitter for Forward Link Traffic Channel

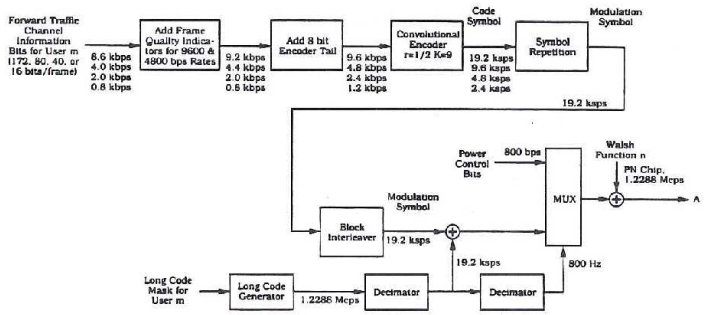

GSM and IS-54/136

European Mobile Communication System
Global System for Mobile Communications (GSM)

This is a second generation cellular phone developed in Europe to create a system for all Europe (replacing the analog systems in many countries).

System Characteristics

Frequency Band	
Mobile Transmit	890-915 MHz
Base Transmit	935-960 MHz
Speech Coder Rate	13 kbps
Information Bits/Speech Frame	182 Class I
	78 Class II
	260 Total
Speech Frame Duration	20 ms
Channel Encoding	50 Class I bits protected with 3 parity bits
	All Class I bits and previous parity bits
	protected with rate 1/2 convolutional code.
Overall code rate	260/456=0.570 information bits/channel bit

System Characteristics (cont.)

Multiple Access	TDMA/Slow Frequency Hop
Slots/Frame	8
Time Slot Duration	0.5769ms
Frame Duration	4.615ms
Modulation	GMSK $B_3T = 0.3$
Symbol alphabet	Binary (differentially encoded)
Hop Rate	216.66 Hops/s (= Frame Rate)
Carrier Spacing	200kHz

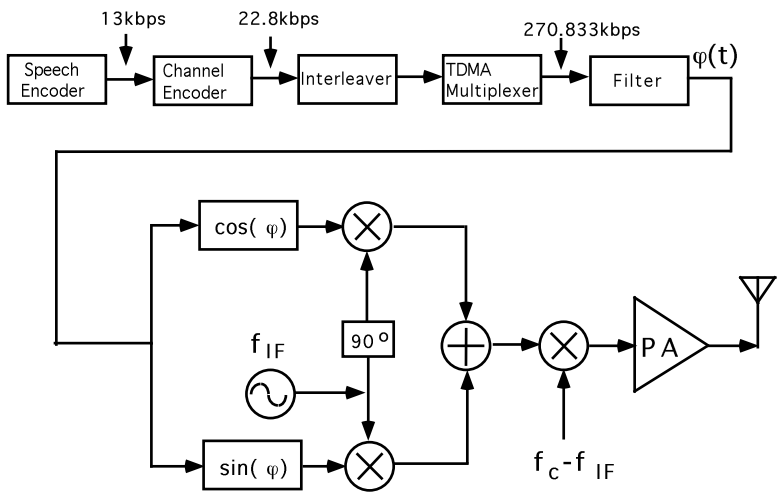

Figure 154: Transmitter Block Diagram for GSM

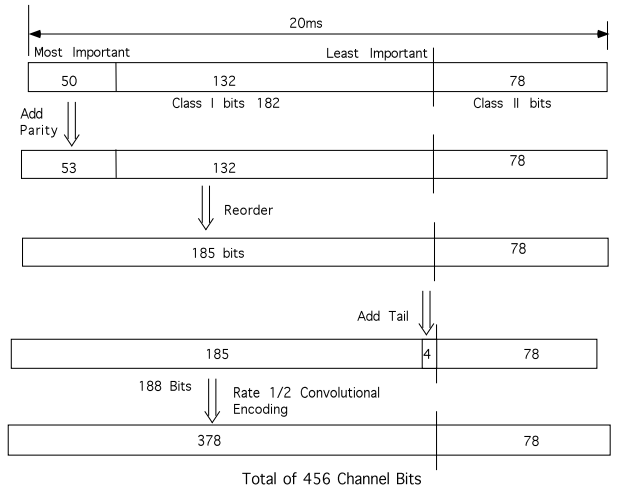

Figure 155: Error Control Coding for GSM

Reordering

$$d(0) \quad d(1) \quad d(2) \quad \cdots \quad d(50) \quad p(0) \quad p(1) \quad p(2) \quad d(51) \quad d(52) \quad \ldots \quad d(181)$$

$$\Downarrow$$

$$d(0) \quad d(2) \quad d(4) \quad \cdots \quad d(180) \quad p(0) \quad p(1) \quad p(2) \quad d(181) \quad d(179) \quad \ldots \quad d(1)$$

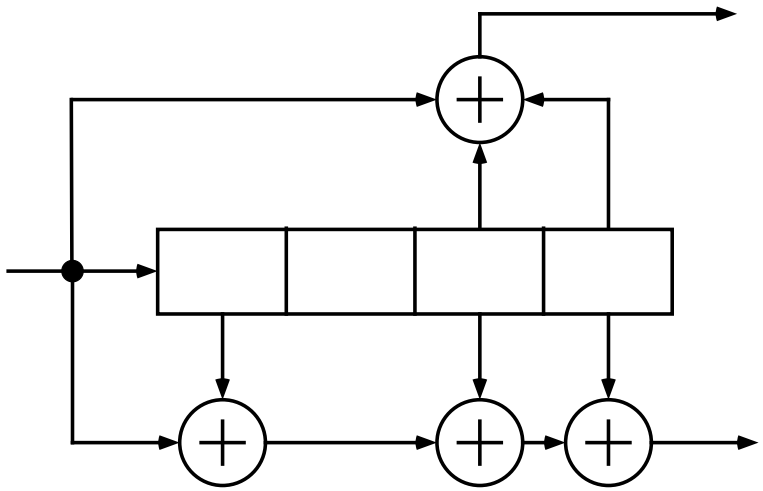

Figure 156: GSM Convolutional Encoder

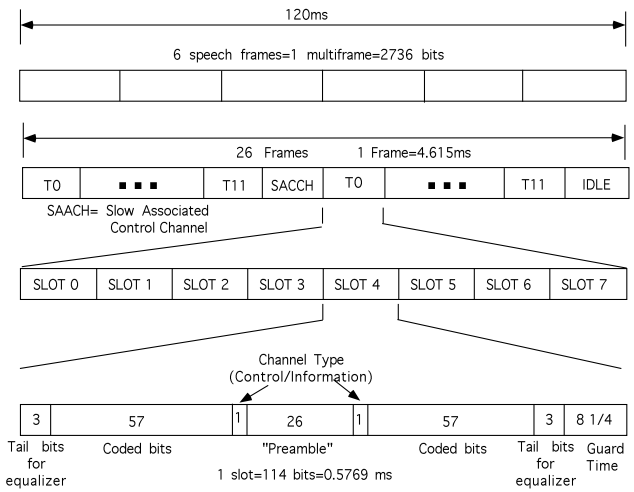

Figure 157: GSM Frame Structure

Interleaving for GSM

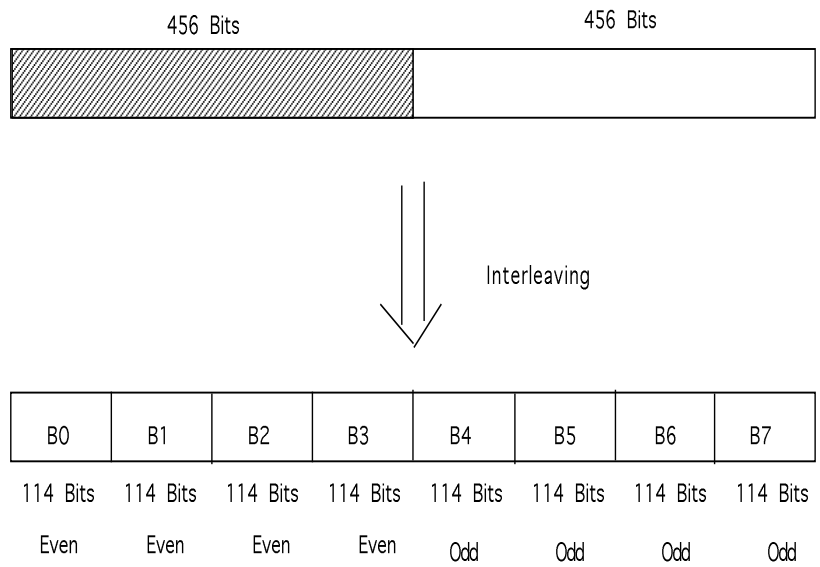

Figure 158: Interleaving for GSM

B0	B1	B2	B3	B4	B5	B6	B7
0	57	114	171	228	285	342	399
64	121	178	235	292	349	406	7
128	185	242	299	356	413	14	71
192	249	306	363	420	21	78	135
256	313	370	427	28	85	142	199
320	377	434	35	92	149	206	263
384	441	42	99	156	213	270	327
448	49	106	163	220	277	334	391
56	113	170	227	284	341	398	455
120	177	234	291	348	405	6	63
184	241	298	355	412	13	70	127
248	305	362	419	20	77	134	191
312	369	426	27	84	141	198	255
376	433	34	91	148	205	262	319
440	41	98	155	212	269	326	383
48	105	162	219	276	333	390	447
112	169	226	283	340	397	454	55
176	233	290	347	404	5	62	119
240	297	354	411	12	69	126	183
304	361	418	19	76	133	190	247
368	425	26	83	140	197	254	311
432	33	90	147	204	261	318	375
40	97	154	211	268	325	382	439
104	161	218	275	332	389	446	47
168	225	282	339	396	453	54	111
232	289	346	403	4	61	118	175
296	353	410	11	68	125	182	239
360	417	18	75	132	189	246	303
424	25	82	139	196	253	310	367

B0	B1	B2	B3	B4	B5	B6	B7
32	89	146	203	260	317	374	431
96	153	210	267	324	381	438	39
160	217	274	331	388	445	46	103
224	281	338	395	452	53	110	167
288	345	402	3	60	117	174	231
352	409	10	67	124	181	238	295
416	17	74	131	188	245	302	359
24	81	138	195	252	309	366	423
88	145	202	259	316	373	430	31
152	209	266	323	380	437	38	95
216	273	330	387	444	45	102	159
280	337	394	451	52	109	166	223
344	401	2	59	116	173	230	287
408	9	66	123	180	237	294	351
16	73	130	187	244	301	358	415
80	137	194	251	308	365	422	23
144	201	258	315	372	429	30	87
208	265	322	379	436	37	94	151
272	329	386	443	44	101	158	215
336	393	450	51	108	165	222	279
400	1	58	115	172	229	286	343
8	65	122	179	236	293	350	407
72	129	186	243	300	357	414	15
136	193	250	307	364	421	22	79
200	257	314	371	428	29	86	143
264	321	378	435	36	93	150	207
328	385	442	43	100	157	214	271
392	449	50	107	164	221	278	335

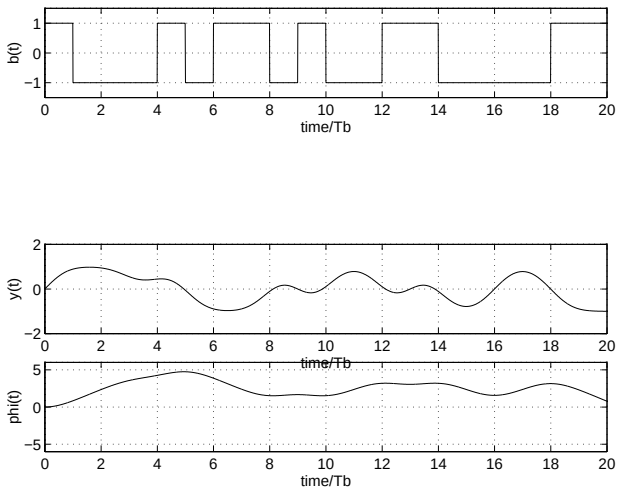

Figure 159: GMSK Waveform

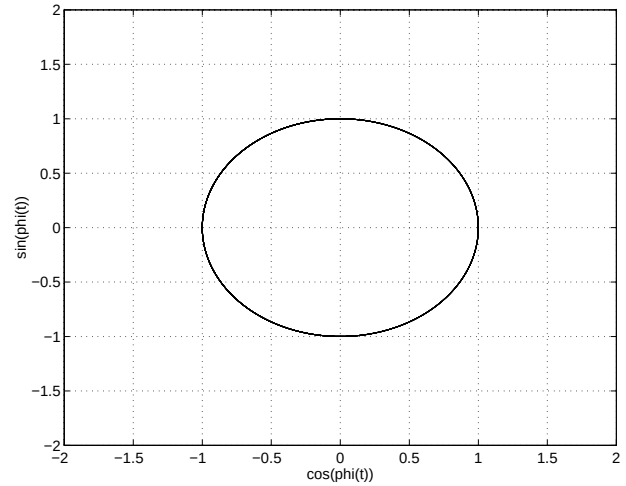

Figure 160: GMSK Waveforms

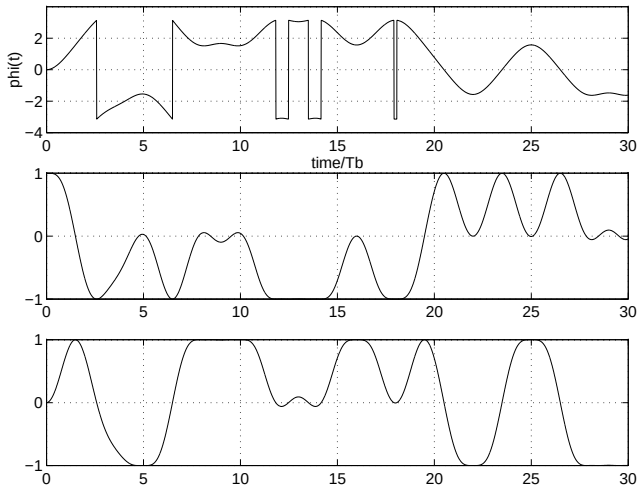

Figure 161: GMSK Waveforms

IS-54/136

This is a second generation cellular phone developed for the US market and standardized in 1990. It is very similar to PHS in Japan

System Characteristics

Frequency Band	
Mobile Transmit	824- 849MHz
Base Transmit	869-893 MHz
Speech Coder Rate	7.95kbps
Information Bits/Speech Frame	77 Class I 82 Class II 159 Total
Speech Frame Duration	20 ms
Channel Encoding	12 Class I bits protected with 7 parity bits All Class I bits and previous parity bits protected with rate 1/2 convolutional code.
Overall code rate	159/260=0.612 information bits/channel bit

System Characteristics (cont.)

Multiple Access	TDMA
Frame Duration	40ms
Slots/Frame	6
Slot Duration	6.66ms
Coded Symbols/Slot	260
Instantaneous Rate	48.6 kbps
Modulation Rate	24.3 ksps
Modulation	$\pi/4$ DQPSK, Raised Cosine Filtered with $\alpha = 0.35$
Symbol alphabet	Quaternary (differentially encoded)
Carrier Spacing	30kHz

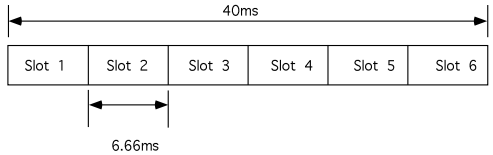

Figure 162: Frame Structure of IS-54

Each user is assigned two of the six slots. Full rate users are assigned two slots which are either slots 1 and 4 or 2 and 5 or 3 and 6. Half rate users are assinged one channel. Thus every 30kHz channel is used by three full rate users and thus the capacity is three times that of AMPS.

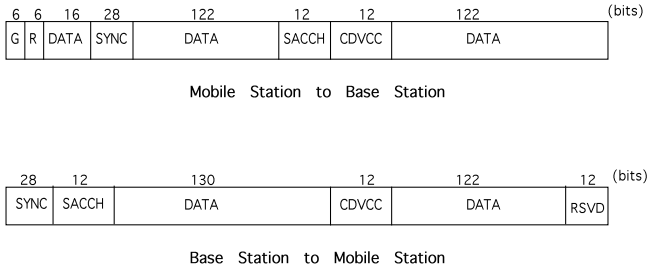

Figure 163: Slot Format for IS-54

G= Guard Time
R= Ramp Time
Data= User Information or FAACH
RSVD= Reserved
SACCH=Slow Associated Control Channel
CDVCC=Coded Digital Verification Color Code

Control Channels

The Slow and Fast Associated Control Channel is used for signalling bits such as for handoff, power control and timing. The Fast Associated Control Channel is transmitted in a blank and burst mode, that is, the traffic information for a slot is replace by signalling information for that slot.

Color Code

The CDVCC is used to distinguish signals from different cells. There are 255 possible values for CDVCC which is coded with an (12,8) shortened Hamming code for error protection.

Power Control

Mobile must be capable of changing the power transmitted in 4dB steps from -2dBW to -34dBW on command from the Base Station.

Time Control

Mobile must be capable of changing the time of transmission of a slot in steps of duration 1/2 a symbol.

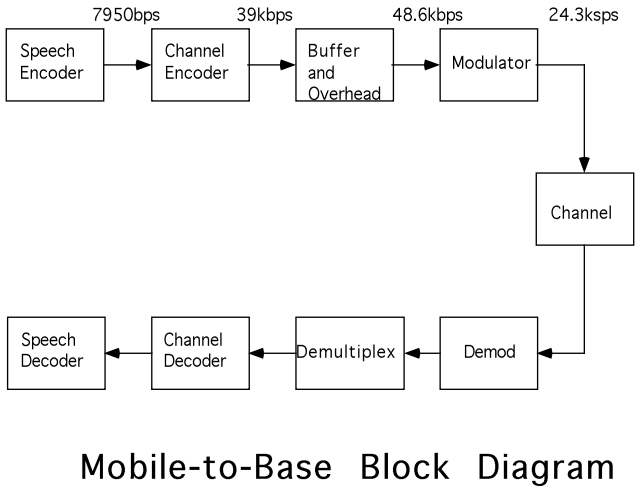

Figure 164: Block Diagram of Encoding for IS-54

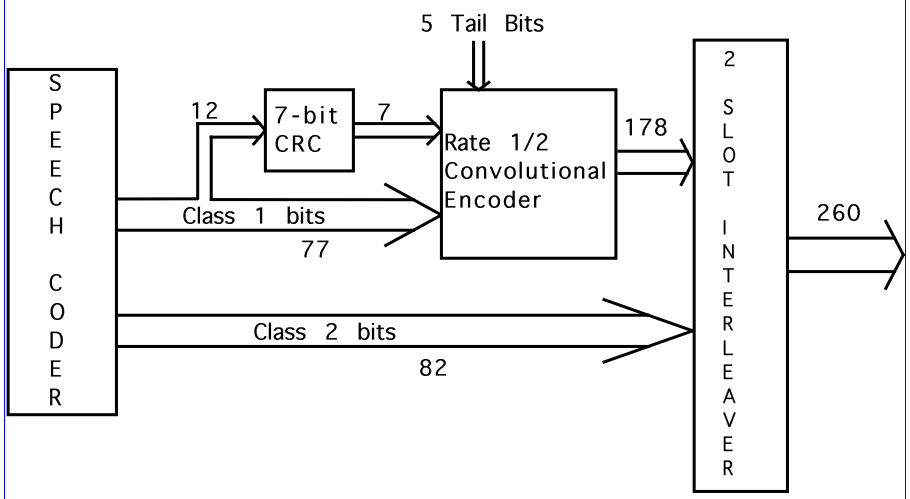

Figure 165: Block Diagram of Encoding for IS-54

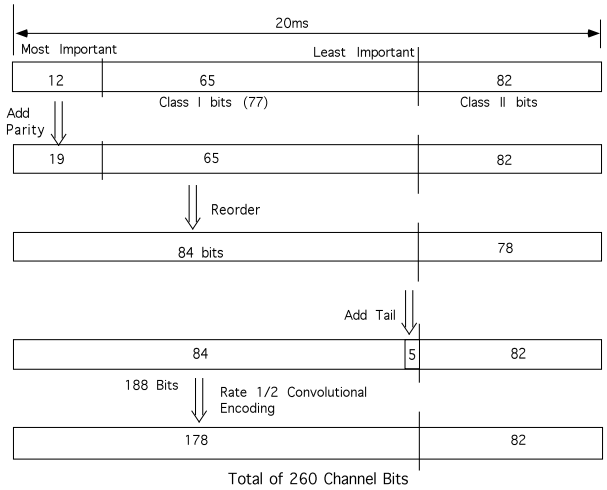

Figure 166: Encoding for IS-54

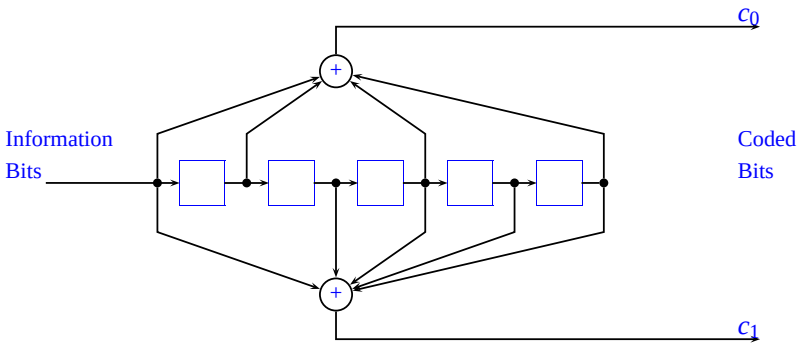

Figure 167: Constraint Length 6, Rate 1/2 Convolutional Encoder

The 2-slot interleaver works as follows. The even numbered bits are written into one interleaver in the even numbered locations while the odd numbered bits are written into a second interleaver. These are written in column-wise filing up the first column, then the second column and so on. (The even numbered bits are denoted by x and and the odd numbered bits are denoted by y below). The transmitted bits for a given slot are the contents of one of the interleavers read out row-wise.

Interleaver for IS-54

0x	26x	52x	78x	104x	130x	156x	182x	208x	234x
1y	27y	53y	79y	105y	131y	157y	183y	209y	235y
2x	28x	54x	80x	106x	132x	158x	184x	210x	236x
3y	29y	55y	81y	107y	133y	159y	185y	211y	237y
4x	30x	56x	82x	108x	134x	160x	186x	212x	238x
5y	31y	57y	83y	109y	135y	161y	187y	213y	239y
⋮	⋮	⋮	⋮	⋮	⋮	⋮	⋮	⋮	⋮
12x	38x	64x	90x	116x	142x	168x	194x	220x	246x
13y	39y	65y	91y	117y	143y	169y	195y	221y	247y
⋮	⋮	⋮	⋮	⋮	⋮	⋮	⋮	⋮	⋮
24x	50x	76x	102x	128x	154x	180x	206x	232x	258x
25y	51y	77y	103y	129y	155y	181y	207y	233y	259y

Thus the order of bits transmitted would be the following.

Bit 0 from current speech frame.
Bit 26 from current speech frame.
Bit 52 from current speech frame.
Bit 78 from current speech frame.
Bit 104 from current speech frame.
Bit 130 from current speech frame.
Bit 156 from current speech frame.
Bit 182 from current speech frame.
Bit 208 from current speech frame.
Bit 234 from current speech frame.
Bit 1 from previous speech frame.
Bit 27 from previous speech frame.
Bit 53 from previous speech frame.

Synchronization Sequences are shown below with the autocorrelation functions shown below.

$-\frac{\pi}{4}$	$-\frac{\pi}{4}$	$-\frac{\pi}{4}$	$\frac{3\pi}{4}$	$\frac{\pi}{4}$	$\frac{3\pi}{4}$	$-\frac{3\pi}{4}$	$\frac{3\pi}{4}$	$-\frac{3\pi}{4}$	$-\frac{\pi}{4}$	$\frac{3\pi}{4}$	$\frac{\pi}{4}$	$-\frac{\pi}{4}$	$-\frac{\pi}{4}$
$-\frac{\pi}{4}$	$-\frac{\pi}{4}$	$-\frac{\pi}{4}$	$\frac{3\pi}{4}$	$-\frac{3\pi}{4}$	$\frac{3\pi}{4}$	$\frac{\pi}{4}$	$\frac{3\pi}{4}$	$\frac{\pi}{4}$	$-\frac{\pi}{4}$	$\frac{3\pi}{4}$	$-\frac{3\pi}{4}$	$-\frac{\pi}{4}$	$-\frac{\pi}{4}$
$-\frac{3\pi}{4}$	$\frac{\pi}{4}$	$\frac{3\pi}{4}$	$-\frac{3\pi}{4}$	$-\frac{3\pi}{4}$	$-\frac{\pi}{4}$	$\frac{\pi}{4}$	$-\frac{3\pi}{4}$	$-\frac{3\pi}{4}$	$\frac{\pi}{4}$	$\frac{\pi}{4}$	$\frac{\pi}{4}$	$-\frac{3\pi}{4}$	$\frac{\pi}{4}$
$\frac{\pi}{4}$	$-\frac{3\pi}{4}$	$\frac{3\pi}{4}$	$\frac{\pi}{4}$	$\frac{\pi}{4}$	$-\frac{\pi}{4}$	$-\frac{3\pi}{4}$	$\frac{\pi}{4}$	$\frac{\pi}{4}$	$-\frac{3\pi}{4}$	$-\frac{3\pi}{4}$	$-\frac{3\pi}{4}$	$\frac{\pi}{4}$	$-\frac{3\pi}{4}$
$\frac{\pi}{4}$	$\frac{3\pi}{4}$	$\frac{\pi}{4}$	$-\frac{3\pi}{4}$	$-\frac{3\pi}{4}$	$-\frac{\pi}{4}$	$\frac{\pi}{4}$	$-\frac{\pi}{4}$	$\frac{\pi}{4}$	$-\frac{3\pi}{4}$	$-\frac{3\pi}{4}$	$\frac{3\pi}{4}$	$\frac{\pi}{4}$	$\frac{3\pi}{4}$
$-\frac{3\pi}{4}$	$\frac{3\pi}{4}$	$-\frac{3\pi}{4}$	$\frac{\pi}{4}$	$\frac{\pi}{4}$	$-\frac{\pi}{4}$	$-\frac{3\pi}{4}$	$-\frac{\pi}{4}$	$-\frac{3\pi}{4}$	$\frac{\pi}{4}$	$\frac{\pi}{4}$	$\frac{3\pi}{4}$	$-\frac{3\pi}{4}$	$\frac{3\pi}{4}$

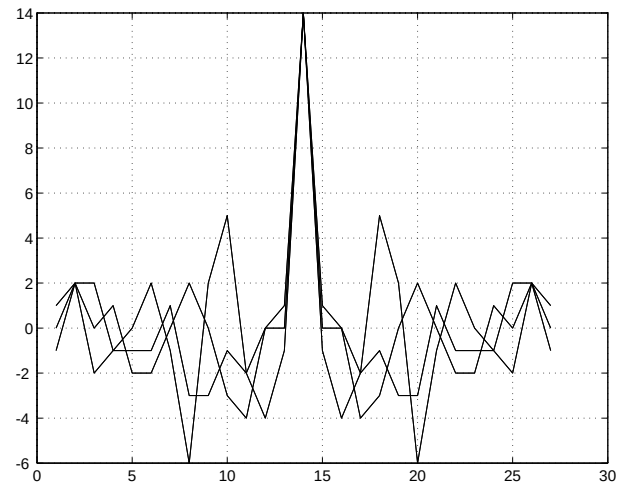

Figure 168: Autocorrelation function of synchronization sequences

Demodulation/Decoding

Error in transmission can cause the CRC for the 12 most perceptually significant bits to fail. When a slot is used as a FACCH the CRC will likely fail also.

The decoder has six states.

State 0: CRC checks, and the received dat is used by the speech decoder.

State 1 CRC Fails: The 12 bits from the previous frame are used for the 12 most perceptually significant bits.

State 2 Two consecutive CRC Fails: The 12 bits from the previous correct frame are used for the 12 most perceptually significant bits.

State 3-6 Three consecutive CRC Fails: The 12 bits from the previous correct frame are used for the 12 most perceptually significant bits except the speech frame energy is attenuated by 4dB is state 3, 8dB in state 4, 12 dB in state 5 and the speech frame is muted in state 6.

In states 2-5 a correct CRC brings the decoder state to 0. In state 6 two consecutive correct CRC's bring the encoder to state 0.